
analog film is here

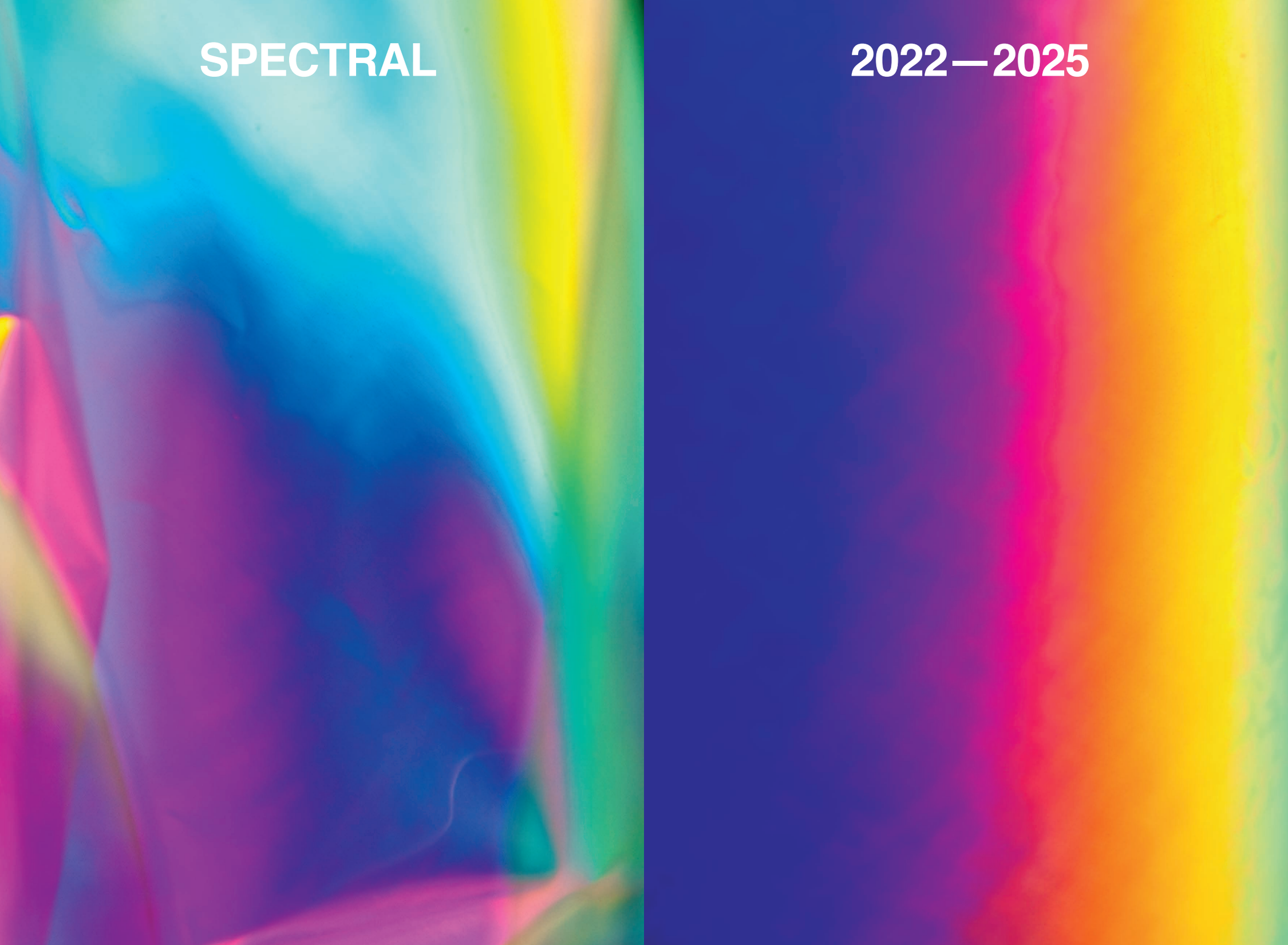
SPECTRAL
2022—2025

10 Baltic Analog Lab
*On Expanded Cinema. Discussion at Process Festival 2023*

30 Laia — Torre
*Primal Light*

54 Crater-Lab
*Expanded 360 Crater-Lab. An Immersive Drift*

78 WORM Filmwerkplaats

94 LaborBerlin
*The Space Is the Place*

124 Mire
*Wandering Images and Sounds*

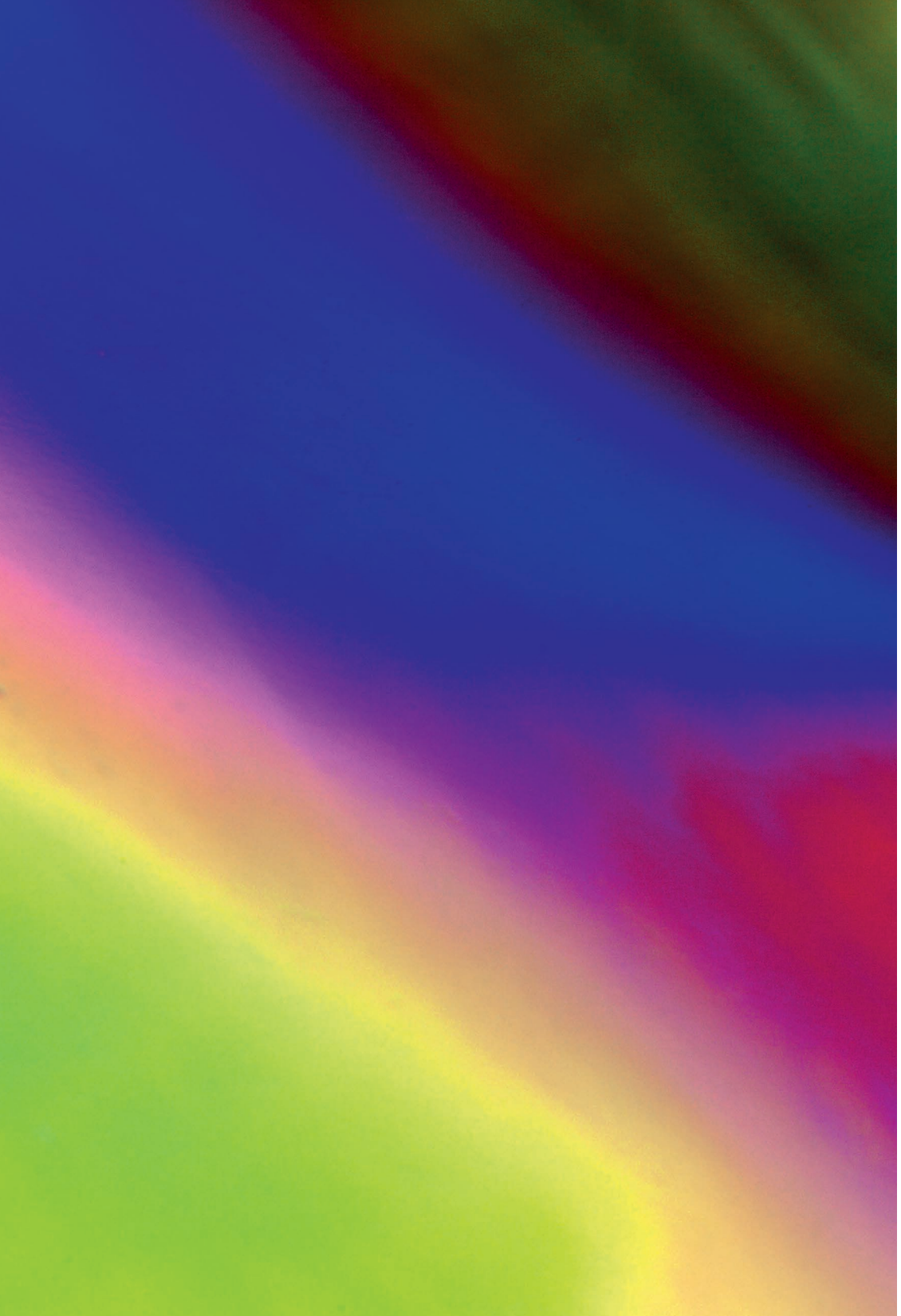

# Introduction

by

Baltic Analog Lab
Crater-Lab
WORM Filmwerkplaats
Laia – Torre
LaborBerlin
Mire

The SPECTRAL project brought together six artist-run analogue film labs that collaborated around the theme of expanded cinema between 2022 and 2025. They organised performances, exhibitions, residencies, tours and workshops, and revitalised old machinery and forgotten traditions while developing new devices. In this context, the word 'spectral' has two meanings: on the one hand, it refers to the light spectrum and how the human perceptual system divides it into separate hue bands; on the other hand, it is an acronym that stands for Spatial, Performative & Expanded Cinematics – Transnational Research at Artist-Run Labs. This dual meaning encapsulates the conceptual breadth and practical identity of the initiative, capturing the complexity of what expanded cinema can represent within the artist-run lab community. The project was initiated by the following six labs: Baltic Analog Lab (Riga, Latvia), Crater-Lab (Barcelona, Spain), WORM Filmwerkplaats (Rotterdam, the Netherlands), Laia – Torre (Porto, Portugal), LaborBerlin (Berlin, Germany), and Mire (Nantes, France).

Just as the visible light spectrum is separated into different colour bands, each lab has independently focused on diverse topics, establishing its unique interests within the project. In the same way, this publication does not aim to summarise everything produced, created or accomplished over the past four years, but instead offers a fragment and a context for our activities. Readers are invited to try to reconstruct the light from which we all stem, bearing in mind that, in analogue film, an image exists only if that initial light is filtered, modified or manipulated in some way. Those who feel daunted by this seemingly Promethean-Sisyphean task can find great assistance in consulting the SPECTRAL website, which contains details of most activities developed within the project.[1]

This publication contains six texts that showcase a variety of writing styles, forms and topics. Each reflects on some of the core ideas, processes and discussions developed by the labs involved in the SPECTRAL project.

In May 2023, the fifth edition of the Process festival, organised by Baltic Analog Lab, featured two nights of expanded cinema performances by international artists. Participating artists and curators joined a public panel to discuss this broad and multifaceted practice—its definitions, approaches and specificities. Their contribution to this publication is a transcript of that discussion.

Another approach to these matters is to return to the origins of the medium and to the raw elements that shape our perception. Building on primordial image-making processes, Laia – Torre explores analogue filmmaking devices not just as technical instruments, but as mediums that channel light into altered dimensions of reality, as acts of evocation. During SPECTRAL, they developed a series of artistic residencies under the theme of Primal Light. In this publication, they reflect on the interplay of images and light in dialogue with the natural world, tracing a visual journey from creation to exhibition that extends beyond the walls of the cinema.

While Laia – Torre's poetic approach evokes the elemental origins of film, Crater-Lab shifts the focus towards questions of immersion and technology. Its contribution is an expanded essay featuring quotes, hyperlinks and QR codes that reflect on the Lab's involvement in the SPECTRAL project. The text explores their engagement with immersivity and 360° photomechanical analogue devices in expanded cinema, historically contextualising their work. It also looks at how these ideas have been taken up by contemporary artists and highlights key works that bridge the gap between artistic practice and technical experimentation.

Adopting a more hands-on approach, WORM Filmwerkplaats addressed the technical limitations faced by contemporary analogue practitioners. The digital shift in the cinema industry has left the production of prints for small-format projection, such as 16mm, underserved by existing technology. The WORM Filmwerkplaats's research into device prototypes emphasised the creation of various DIY solutions to encourage artists worldwide to build their own 16mm film contact printers. The outcome is presented in the form of an IKEA-style manual, with all parts shown in clearly arranged line drawings, making assembly effortless.

In 2023, LaborBerlin further explored questions of preservation and transmission by collaborating with the European Media Art Festival in Osnabrück, Germany, to create a series dedicated to restaging historical works of expanded cinema under the title *Unburdened Recollections*. The project analysed how archival practices might preserve the live, performative nature of expanded cinema. The aim was to develop methods for a living archive that could capture the experiential and spatial aspects of these works rather than reducing them to static historical artefacts. A series of essays reflects on the process of researching and recreating three historic pieces, offering insights into both the challenges and discoveries encountered along the way.

Finally, in expanding the cinematic experience beyond traditional spaces, MIRE explored the idea of taking images and sounds out into the open. The theme of wandering guided their entire journey. Their contribution to the project is a kind of souvenir from this journey: a logbook-like object that preserves memories and reflects a particular perspective and philosophy.

Taken together, these contributions do not provide an absolute definition of expanded cinema, but rather seek to trace some of the directions it might take when shaped by the distinct identities, questions and motivations of artist-run analogue film labs. While each text emerges from a particular context, they are all linked by shared concerns: the relationship between light and matter, the politics of tools and access, the role of preservation and technology, and the desire to think of cinema as an embodied, spatial and collective experience. Throughout the project, expanded cinema has proven to be a constantly evolving field of possibility that is simultaneously technical and poetic, archival and speculative, local and transnational. This diversity is reflected not only in the wide range of activities undertaken by the six participating labs, but also in the variety of approaches found in these pages.

Like the spectrum to which it alludes, SPECTRAL resists easy circumscription. Its edges are blurred, its meanings are shifting and its light is scattered through the various practices it has helped define and sustain. What remains is not a fixed legacy, but rather a series of technical, aesthetic and affective resonances that will hopefully continue to echo beyond the project's completion. In this sense, this publication is both a culmination and a departure point: a moment of reflection that brings together disparate threads before letting them unravel—or unspool—again towards future projects and cinematic forms yet to be imagined.

1 https://www.spectral-cinematics.eu/.

# Baltic Analog Lab

# *On Expanded Cinema. Discussion at Process Festival 2023*

## Riga, Latvia

*Expanded cinema is a very broad field. How can we define it? What are its approaches and specificities? In May 2023, the participants and curators of the Process Expanded Festival sat down to discuss this in front of the festival audience.*

*The panel comprised* **Lynn Loo** *(UK) and* **Guy Sherwin** *(UK), who presented work from several decades of their shared and individual expanded cinema practices in a retrospective programme,* **Aurélie Percevault** *(FR), who performed a projection onto smoke, accompanied by music by Pierre Pierre Pierre,* **Jan Kulka** *(CZ), who performed patterns with a projector he built himself,* **Ieva Balode** *(LV), head of the Process Festival and the Baltic Analog Lab, where this meeting took place,* **Bernhard Rasinger** *(AT), who performed as BR Laser with an analogue laser synthesiser, and* **Elena Pardo** *(MX), who performed Underground Pulses with the local musician Platons Buravickis. The discussion was moderated by* **Ulrich Ziemons** *(DE).*

**Ulrich Ziemons:**
One of the characteristics of expanded cinema is that it focuses on the process of how what we see is produced and takes it out of the obscurity of the projection booth. I also want us to talk about the whys. What made you choose this type of cinematic practice? What's your background in cinema? Did you start out with this type of practice or did you work your way into it? Are you solely doing performative, expanded cinema projects or also more classic projection pieces? Do you consider the term 'expanded cinema' an accurate description of what you do?

**Lynn Loo:**
I'll start with how I got here. At first, I was a piano teacher, and I decided to make films. My first experience was with 16mm film in Singapore, at the only programme—it was, in fact, just a small workshop. Then I went to Chicago, and the teachers there were experimental filmmakers. I was completely new to experimental film, and it was a bit of a culture shock. Then, I slowly started watching a lot of American experimental films. When I was in London, I met a few filmmakers, and it opened up a different world of filmmaking to what I had encountered in America. Those were structural material films, which opened up a whole spectrum of cinema, of space. Then I started making this kind of films. And then expanded cinema. That's the short story.

**Ulrich Ziemons:**
Would you say that your practice is rooted in the tradition that came to be known as 'expanded cinema', which emerged from this structural, material filmmaking?

**Lynn Loo:**
I don't know if I would use the term 'expanded cinema', because it's used for so many ways of working, not just film.

If you ask me how I got into it, I'm just absorbing what comes to me. What's happening, what I have access to. It all comes back to my background in music. The film strip is like a musical score to me. So it makes sense for me to make physical films. The projectors are the instruments.

**Guy Sherwin:**
I studied painting at an art school in London, where I still live. At that time, film wasn't really considered an art form. I was lucky enough to stumble upon the Film-Makers' Co-op, a very strong, powerful avant-garde movement, with some strong characters leading it with strong theories about their practice as non--illusionary. That's how I started doing performances. The ones I presented at this festival in Riga were to do with the screen as a material that's also under consideration, which it certainly isn't in most cinematic experiences—a malleable medium to do things with. There are some good examples of that in other parts of this festival. Another aspect is working with soundtracks made from raw materials—things you can stick onto the film or film with a camera. And those images are then laid into the soundtrack area to form a kind of optical sound. What got me excited was this whole range of ways you can delve into this equipment—it is not designed for that, but nevertheless throws up all kinds of possibilities. And not just the technology. I was always drawn to film, fascinated by the fact that you could capture a piece of time and hold on to it and look at it again later. It hasn't been around for very long—only 130 years or so.

**Ulrich Ziemons:**
One or two of the pieces that you were showing involved images of yourself that were shot in the 1970s. Did you always have in mind to perform them decades later?

**Guy Sherwin:**
No, that wasn't my intention, but I've really enjoyed people's reactions lately. Somebody came up to me the other day and said they thought it was probably my son that I was performing with, not me 50 years ago.

It's about what happens when you capture the space and time outside and bring it inside and play with that illusion. Coming from painting, that kind of playing with illusion happens all the time. It's taken for granted when you're looking at a painting—it's a blue blob, but it's also part of somebody's face. And it is well recognised that there is always a tension between a painting, the fact that it is paint on canvas, and the illusion that is part of the enjoyment of it. That's what intrigued me about film, too.

**Ulrich Ziemons:**
The question of the screen being malleable or even uncontrollable also came up in your performance, Aurélie.

**Aurélie Percevault:**
Going back to your question about whether 'expanded cinema' is an accurate term: not really, but I didn't find a better one. Speaking of fire, I feel it's always a nice way to gather people. I also like the way that making the fire is part of the performance. Someone from the audience is always helping, either with the fire or gathering things.

I also make short films and I feel it's always difficult to finalise a version. Then it's almost dead—it stays that way forever. What I like about performing is that it can evolve every time you do it.

I studied sociology and I came to know the field of experimental cinema more through this. I got involved as an observer, a viewer. I started to make films after being an organiser, as I'm also working for an association dedicated to experimental cinema called Mire as a coordinator or project manager—writing applications,






Fig.1 Lynn Loo, Guy Sherwin, Aurélie Percevault, Jan Kulka, Ieva Balode, Bernhard Rasinger and Ulrich Ziemons. Process festival discussion 2023, © Tomas Terekas

Fig.2 Lynn Loo and Guy Sherwin. Process festival discussion 2023, © Tomas Terekas



finding funding. But we have a lab, and through this work I met a lot of people and I really wanted to get hands-on. I think that's very possible in this field.

**Ulrich Ziemons:**
Jan, 'hands-on' is exactly the keyword for you, as you built your own machine. Many of you use standard projectors, sometimes modifying them or adding other elements. But you built your own machine from scratch.

**Jan Kulka:**
That's right. Here's my background: first, I studied graphic design; then, classical animation; then, film editing. I always liked analogue infrastructure — photography and film. And I asked myself what the actual reason to use it nowadays is, how can I justify it to myself. It's obsolete technology, it brings all kinds of trouble, it's expensive. Do I just like it? Is it a fetish? Is there something unique that analogue technique can bring today?

There was a very simple, technological issue with a film I was planning to do. There would be a spinning spiral, like a hypnosis film, and I would have to shoot 20 minutes of 16mm film. That's pretty long and expensive. Then I came across the research of a genius Czech scientist from the 19th century, the grandfather of film, one of the pioneers who discovered how to trick the eye and make the illusion of movement or reproduction of movement. In the end, I didn't shoot the spinning spiral on a film, but I decided to hack a still projector. I adapted a spinning mechanism and inserted the picture inside it. In the end, I had real motion on the screen. Then, I tried to analyse what was actually happening, because it's so different to have the illusion of movement or real movement.

That was my initiation moment, and I was just fascinated by what I had put together. I was hypnotised and I knew I had stepped into my thing, something I want to explore.

Nowadays, the whole world is digital. You have distribution all over the world with one click. But, to use a metaphor, there are many ways to get to Santiago de Compostela. You can fly there; it's faster and more efficient. If you walk, it takes ages, but the process is meaningful. It changes you; you have plenty of time for thinking.

It's similar for me. When you're building this machine, you spend time in the workshop, it takes ages. You are grinding wood and aluminium, but you have time to think. You have to live in the present moment because there's no undo button. And you don't realise that until you screw something up and you have to do it again. The next time, you really think before you cut.

Another post-digitalisation aspect is that, if I want to screen my films on film, there's often no projector, so I have to bring my own. That's an opportunity —since I'm bringing something in, maybe I can bring something even more interesting.

Film tradition is quite rich, and I didn't want to repeat what has already been done. I came across Vilém Flusser's book *Towards a Philosophy of Photography*. He wrote about the relation between the instrument and the artist. It gives you possibilities, but limitations as well. It serves you, but you have to serve it.

He also talks about the whole hierarchy of apparatus. The first apparatus is the camera. Then the film industry, and then the political system, and so on. He describes artists as monkeys who have to follow the programme—you have to press the button, focus and everything. I was offended by this. I didn't want to be a monkey, I wanted to prove Vilém Flusser wrong or escape this thing.

All these things got me thinking – maybe I could develop my own instrument to set my own limitations and possibilities.



I asked myself: what is film, if I'm a filmmaker? I should not be a zombie, automatically doing what others are doing. In my search for the true essence of film, I arrived at my own definition. Film has all these different arts inside. There's drama, but you can get rid of the narration. You can get rid of everything apart from light. Light is essential, but it is not film itself; you have to do something with it. So, my definition is that film is the articulation of light.

If I want to design an instrument for film that articulates light, the starting point is very different from just making a reproduction of movement. The result is what I have brought to this festival. It's called the archeoscope, or pramítačka in Czech. It is a machine that utilises old principles, but incorporates new technology. For example, LED diodes as a source of light, which is a game changer. It has four lenses. If I insert, let's say, 16mm film and I stop it, I can still reanimate different phases by flickering different lenses. Or I can think about the image in a different way: there are no frames, so it could be continuous, or the final image on the screen could consist of four luminous layers, like from different parts of the film. I like to rethink all the traditional aspects of cinema. I like to make it a playful game for myself.

**Ulrich Ziemons:**
Ieva, how did this focus on expanded cinema this year come about?

**Ieva Balode:**
I think the essence of experimental film historically was always to deconstruct and question what cinema is and what it can be. We always think about the finished work that is screened on the screen, but when we start to deconstruct it and look at all the elements involved, there is actually a lot more to it. So it's the film itself, it's the projector, it's the projectionist, it's the screen, it's the audience, it's the space. We really want to push these boundaries and make it more involving with the audience, the space and all the objects involved. We really want to showcase all this variety of what cinema can be.

Most of the time, filmmakers make these films by themselves. Expanded cinema really manifests this personal approach to making the film and then projecting it by yourself and involving the audience—also quite important in the expanded cinema performance practice.

The Baltic Analog Lab is also about engagement and community building, finding a place where we can all meet and just open ourselves up. Historically, cinema used to be a social place where people would even discuss the film as they were watching it, smoke, be on a date or hang out with friends. That's something we want to encourage in our festival.

**Ulrich Ziemons:**
Do you feel part of this lab scene, where people learn to go through the process all by themselves, learn all the steps? Do you see people then adopting more expanded cinema practices since they're already more engaged with the material, the machine, the technology? After all, the Baltic Analog Lab is part of a very wide network of labs. Some of its members are on this stage as well.

**Ieva Balode:**
That was definitely the intention of SPECTRAL project, a collaboration project between six artist film labs across Europe: Mire in Nantes, Baltic Analog Lab in Riga, Filmwerkplaats in Rotterdam, Crater-Lab in Barcelona, Laia – Torre in Porto, and LaborBerlin in Berlin. We wanted to focus on expanded cinema and encourage people to create these pieces, because we felt that it hadn't received enough exposure, and that the practice itself was still



unknown territory. Even though there are experimental film festivals, we feel that expanded cinema is always somewhere in between. Maybe we have to redefine what it really is. That's why we also had Bernhard performing a laser show. It's not a photochemical film show, but it's also analogue. And that's something we like to encourage: openness to different forms.

**Bernhard Rasinger:**
Here I learned that I was working on expanded cinema. I didn't know that, because I use a modular synthesiser and a laser projector. My background is in electrical engineering, and the problem with electric engineering is that understanding electricity is really difficult because you can't touch it. A way of understanding is to visualise the electric signal with a tool such as an oscilloscope, a measurement device. I started doing this with synthesisers by accident, simply because I had one of these devices and I was playing in a band with synthesisers.

Regarding the laser show, I wondered at first, as I'm not using film, but it is also an articulation of life. So I built this instrument. It is a modular synthesiser. You can put several different functions into a box, and then you basically connect them with cables. It's kind of what an analogue computer looked like before we had digital components. It's a surface that basically anybody could use. I just turn the knobs and then see where it takes me. Anyone can do this.

People often come up to me after the show and say, "I had the feeling that I saw what I heard". It creates a synaesthetic effect, and this is what I initially wanted to share. I was sitting in front of this little box, the oscilloscope, and thought to myself, "Wouldn't it be nice to share this with a big audience on a big screen? Then the audience can see what I see and be as amazed as I am. I want to share this amazement, not keep it to myself. So, I'm very happy to be here and to find out this is an expanded cinema practice. I've learned something new about myself.

**Ulrich Ziemons:**
I was wondering, yesterday, when I saw the piece that you were performing, whether your performances usually involve a screen, as in a cinema screen. Because, when imagining laser shows, I have this image of a hazy room where the light becomes visible in the space. Was that something you adapted to make it more cinematic?

**Bernhard Rasinger:**
To be honest, I tried different things, including shooting into smoke and fog, and making scanning effects in smoky club rooms. It's a beautiful light effect, and you can cut through space and really make these smoke patterns appear. But then I realised that if I wanted to share this with an audience, the best spaces would be cinemas, because you can sit down, and the sound that I make—I wouldn't really call it music because it is a very minimal and droning sound—isn't uplifting and doesn't want to make you dance. So, it's good to sit down and be hypnotised for half an hour. A cinema with a screen and seating is a very good space to do that.

**Ulrich Ziemons:**
Elena, do you identify your practice with the term 'expanded cinema'? Is expanded projection performance something that you came to through your practice as a filmmaker? Do you also have other cinematic practices?

**Elena Pardo:**
I discovered experimental cinema through a workshop I took in Mexico with filmmaker Naomi Uman. It was a revelation for me. I was trying to be a cinematographer, taking workshops and being obsessed with cameras for a long time. But I didn't find myself in traditional filmmaking. Discovering that you can develop and make your own film was a very beautiful moment for me. It's a way to do something of my own, have a voice.

I also worked as a camera person and editor, and in one of those projects I ended up creating visuals for musicians and touring with them. In 2004 I met a group called Trinchera in Mexico who were doing expanded cinema. I went to see their show, and they gave me some loops, and I realised I had found my instrument.

I also like documentary film very much, and there are many things happening in Mexico. I had not found a way to combine all these things that I was interested in, enjoyed and wanted to share. Now I think the piece I showed here is finally something I made where I could incorporate all the things I like, after all this searching.

**Ulrich Ziemons:**
The idea of the projector almost as a musical instrument, and the idea of improvisation, chance and unpredictability came up a lot, perhaps from all of you. I would like to hear more about how you feel about this element. What excites you about it, what makes introducing this element into your process interesting for you. And about your collaboration with different musicians. You're touring at the moment, performing with different people in each place. It's an improvisation you're sharing—also a very musical way of going about it.

**Elena Pardo:**
Having a piece that is always changing is nice. You don't need to finalise it. It's always growing, introducing new things. The loops break and maybe I shoot some more scenes. It's really nice to work with improvisers. Musicians have this very developed sense that I admire very much. I like to learn from that.

**Ulrich Ziemons:**
How is it with the others? The fact that you yourself are performing the pieces means that you're in the same room as the people watching the film. How much do you make sure that you are able to react to what's happening in the room? Is that built in into your pieces, or is it more like following a score with variations depending on how perfectly you are able to reproduce it?

**Bernhard Rasinger:**
I tend to improvise the set that I play each time. Of course, there are some tricks that I know that I can use, some safe spaces. But when I put the instrument in the room and the audience is there—I also like to decide where the audience is, or to be part of the audience, rather than being on stage or all the way at the back like a projectionist—I want to become part of the audience and see what everybody sees.

While I perform, I create this feedback loop. I look at the image, and then I can change the image just with the turn of a knob, and I might like what I see or not. Or what I hear. I become a filter; it takes me places. The instrument leads me to certain elements in the show. And sometimes I see things for the first time; they can be very abstract. There's a visual feedback loop that I can influence. That's the technique that I use.

**Guy Sherwin:**
When Lynn and I are doing our joint performances, it's usually in another country, somewhere where we don't know the space or we don't know the equipment, like here in Riga. So one of the challenges is how our work is going to fit into that space. What's this equipment like? There are projectors here that we're not very familiar with, amazing ones called Hokushin, with a funny arm that is really delightful to use. Sometimes it's a bit of a struggle. These aren't highly polished

performances. In a way, we're walking dangerously on the edge. Will things work out? Maybe they will, maybe they won't. Maybe something interesting will happen along the way.

Once, in Paris, I was trying to paint the screen for my piece *Paper Landscape*, and the paint just washed off as soon as I put it on. I thought people weren't going to stick around until the end. Lynn had amazingly recorded it. I think it's the first recording we have of this performance. I thought it was fantastic, because it's about this kind of slip-up.

Another example might be *Cycles*, the last film I showed in the programme last night. There are two projectors running out of phase. It's always a struggle with the focus, with the framing, the sound, the timbre. There are a lot of elements there to get right. And when everything comes together, it's exciting. It's a bit like surfing, or riding a horse—you're trying to steer this thing along. I don't know what's happening next in the film. It's not precise in that way. I'm reacting to what I'm seeing and hearing, and it develops that way.

**Lynn Loo:**
Sometimes the space in which we perform plays a role; it's the atmosphere of the environment. And until the last minute, we never know how we're going to end our programme. There could be practical reasons with projectors. It keeps us on our toes but also keeps the works alive. Every time we perform, the work is always different, because projectors never sync. In our programme, each piece has a limit, since it's one reel of film. We can't do a whole show continuously yet until we find a way to do it.

**Ulrich Ziemons:**
You also work with film loops, right? I was thinking about that also in relation to what you said about the anti-illusionist impetus. There is the idea of also getting rid of some of the hierarchies that are built into the cinema apparatus, or 'dispositive' as we know it. The projectionist has control, and so has the film because it has a beginning and an end, it's very defined, and you're not supposed to interfere with it. Looping disrupts that. It was also very striking how you placed yourself among the audience. It was very visible in your piece, where we had to move around to get different angles on the image, which was elusive and kept escaping. It was mesmerising and terrifying at the same time. Aurélie, you said you use fire because it brings people together, but it's also an extremely volatile element.

**Aurélie Percevault:**
I do share this feeling of being slightly in danger. I think this is something that I enjoy about performing—being on the edge. When it goes well, you feel like you've overcome something. Things going badly is also part of the game. With the smoke as a screen, you have to adapt to what is going on. Working with loops is quite convenient for that because you can leave a loop running for as long as you need. If at some point you see that it's becoming boring, at least the smoke is doing the job for you—it's moving, the image is changing.

**Ulrich Ziemons:**
This reliance on technology raises a question: what infrastructure do you need for your practice? As we move away from standardised cinema, the needs of each performance become very specific. Bernhard, you said that you find yourself performing in cinemas a lot, but what about the others? Are cinemas usually the venues for you? Or do you perform in other places?

**Aurélie Percevault:**
The smoke show is definitely not in a cinema. [laughs]





Fig.3 *Underground Pulses* by Elena Pardo. Process festival 2023, © Tomas Terekas
Fig.4 *Isentropic* by Bernhard Rasinger. Process festival 2023, © Tomas Terekas



**Ulrich Ziemons:**
That's an extreme example, but if we think of expanded cinema also as a certain form of critique of cinema as an institution, how interesting is it to perform such pieces inside a cinema? Or do you just want to go outside and that's it?

**Jan Kulka:**
I also share this uncertainty and the feeling of surfing and catching the wave in the moment. In my practice, I'm going back to what it was like in the beginning: the cinematographer is a nomadic guy who brings his own instrument and sets up anywhere—because there were no cinemas. In my experience, it's better if it is not in a cinema, for a bunch of reasons.

If I take a step back, what is my intention for the film as such? I mentioned the articulation of light, but the moment when the whole process is complete is when you share it with people. I've found something that's worth sharing, and it doesn't really matter if it is cinema or something else.

What's most important is the social aspect. It doesn't really matter if the practice is like mine or yours. That's the amazing thing about expanded cinema. It's like a big house; there is room for everyone. You can do all sorts of crazy or standard things.

Nowadays, in this divided world, one of the most valuable things for me is trying to see what we have in common. We are very different in many ways, but we are still human. We have feelings, desires, anxieties. Something that we share and that goes way back in time is being in a cave around a campfire. We remember this unconsciously. My concept of cinema is gathering in a cave around a campfire and just enjoying the time together. You just sit by the fire and watch. There is no story. Nobody tells you anything. And you can just be silent. The same thing with the waterfront—the sun flashing on the water. It's like a short flicker film. Expanded cinema – natural cinema.

There was also the question of how similar or different it is. I feel there is something in the air amongst the people. I'm trying to capture these little moments. It's also different for each film. This is my third so far for the archeoscope. What is in there is determined, because there is the film strip. But the other film is a flicker film, only using stencils and colour filters. And that can be five minutes or five hours; it's very flexible. I can adjust it to the moment. Sometimes, you can feel that the people are well into it, so I can go longer. Other times, the place is not as welcoming or it's not going as well, so I can make it shorter.

**Ieva Balode:**
We had a nice discussion in Oberhausen about how the space dictates how the performance will happen and what kind of people will come. John Price from Canada spoke of his experience doing a show in a lighthouse, and he said that the people who came to the lighthouse were not necessarily the audience of experimental film or expanded cinema. They were just people who liked lighthouses. I think that's also a nice way to think about how the space can expand the audience, and vice versa. We also did a screening last summer at the BAL summer school in the forest, where we installed a curtain over the water, surrounded by trees. That also brings a different dynamic. It really is interesting to see how the space can change the whole spectacle.

**Ulrich Ziemons:**
Elena, your piece uses the form and the technique of expanded cinema, but also thinks about things outside of film. It is about the exploitation of natural resources, about ecological disasters and the devastation caused by humans.



I'm assuming that it's also meant to be a conversation starter. The question of which spaces this piece accesses and which people it reaches is probably also something that you think about.

**Elena Pardo:**
I shot this film in Mexico in two parts—one in the south and one in the north. It was important to me, since the beginning, to show the piece, especially to people from Oaxaca. These communities are very united and they allow you to come in, but you also have a lot of responsibility. At every step, I showed them what I was doing and listened to their thoughts. So it was really important to go to that space and show them the film wherever they had a light or white wall. In Zacatecas, the only venue was a pool and beer place where all the miners go. The owner said, "You can use that wall. But don't take up too much space because it's Friday. Today's my good day, and all the miners come to drink". So, I was cramped in a corner with my projector, and, in the beginning, nobody was paying attention. But then they started recognising themselves or the places where I was shooting. By the end, all the miners were watching, talking and laughing.

As you said, when you take it out, you reach other people who maybe were not expecting this or didn't know about this. I think it's interesting to talk about this idea of what our ideal place would be. Maybe something like yesterday, but without chairs so that people can go around, maybe be in the middle instead of at the back.

**Lynn Loo:**
I wonder if anybody has experience in galleries or other spaces instead of festivals that are programmed. Cinema is restrictive. There are seats, everybody has to be in a certain position, but we like to move around, as you saw when Guy moved everyone to the wall during the performance. We have always preferred open spaces, but we also try to adapt our pieces if we're invited to galleries. That allows us to reach a different audience and brings a different understanding to the work.

**Aurélie Percevault:**
I happened to play a piece called *Zeropixel* at the [Nantes] Art museum. The theme of the exhibition was Chaplin and machines. You are right about this: depending on where you are playing, you'll attract a different audience. I also wanted to look at this from a curatorial perspective. At Mire, we collectively create expanded cinema evenings. We really like not to be in a cinema; we like every piece to have a different setting. So, you're travelling as a viewer; you are in a different world, in a different configuration. We also like to not have too many seats, so that people can be free in their body, sit on the floor or walk around. I'm also thinking of reaching new audiences. Something we like to do at Mire is to wander the streets with a car battery and show films outside. People just coming across a film. It opens up the context. Sometimes, projecting a film that is made for the cinema outside totally changes the reception and the audience.

**Ulrich Ziemons:**
There's a collective in Hamburg called A Wall Is a Screen. They do tours through cities all over the world, where they curate specific short film programmes. For each film they go to a different site in the city, they plot out their tour and use different environments to show it.

**Aurélie Percevault:**
Also as part of the SPECTRAL project, Laia from Portugal have a programme called Challenging the Cinema Room. Another experience that we had for



Prism was a musician playing with the sound system of the cinema. You can also change what this space is for.

**Ulrich Ziemons:**
Or using the projector as a camera, like Peter Miller did.

**Aurélie Percevault:**
Reinventing the cinematograph.

**Ulrich Ziemons:**
Bernhard, how is it for you? I would assume that you also perform a lot in a musical context. Is that true? Is it challenging to find that cinema space or that perfect space that you want to have for your performance?

**Bernhard Rasinger:**
I wouldn't go so far as to call it music. A question that is often asked is: Is the sound becoming music yet? But with musicians usually there's a stage, or it's in a theatre or in a club. You might have people standing... I often have a problem with the laser. I have to watch out for people's eyes; the space needs to be the right height. Often, shows are cancelled because the space is not right for the laser, which is dangerous for the eyes. So, I also struggle with the space. It's good to have a picture of the space beforehand and to see where I can put the projector and how to do this safely for the musicians. It can be a wall on stage, behind the stage, or on the side of the venue. You can move things around, or you can tilt the viewing point. You can play with the space. I like to do this together with the performing artists. It's always a challenge to make it fit in the space. I was attending the BAL summer school in Cēsis last year, and we were shooting the laser into a tree and scanning it. This organic structure becomes the canvas or the screen. It's like shooting into smoke, but not as elusive. It's more stable.

***Question from the audience:***
From what I know about this practice of expanded cinema, tension is important. I like the tension created by using a tool that is not really meant for this. It's not the purpose of the 16mm projector to be moved during a screening or to be used as an instrument. Using something for a purpose for which it was not made, and using what you have, what is around, I really relate to that. And I think it's important today to think that creativity can be used in this way instead of always inventing new stuff to fit your preconceived ideas of perfection. When you are playing around with something and you find something you like, I think it's a great lesson that can be learned from the heritage of experimental cinema: using simple stuff and create something you enjoy. I think this is really meaningful. This isn't really a question, but do you relate to this? Do you use limited resources on purpose?

**Ulrich Ziemons:**
Is anyone misusing technology here?

**Guy Sherwin:**
I agree with that. One of the things that Lynn and I try to do—and we enjoy it—is having people come around at the end of our shows and explain to them. It's partly because we've been teachers; that's how I've made my living throughout my life. But it's the simplicity of the technique combined with the complexity of the experience that is important for me.

I see it in Bernhard's work—there is a simplicity in the way you explain and describe these things. I don't understand electronics, and there's a lot I don't understand about what you're doing, but I like this simplicity.

**Lynn Loo:**
Last night, when we were showing the audience the film, everybody could understand the light, the sound, you could see the images. It just shows people that this is something they can do too. What we bring is our own creativity, our own meaning to it. If anyone else did it the same way, it would look different. I see this as a craft. We come together, we look at each other's work, we know how it works, but then we put our own personal touch to it and people can understand how it all works. Because there's nothing hidden. Everything's there. When I think about it... Why do people get so excited? I like to connect with the audience as well. I'm happy to show you how the whole thing works. I think that connection is the key to why it is so exciting because people understand the meaning, the reasoning.

***Question from the audience:***
Here's another thought for you to reflect on. A cinema is traditionally divided into three parts: the screen, the audience, and the content, which comes from the projector and is perhaps only checked by a technician. I would like to know your thoughts on the fact that you, as creators and performers, become part of the work. It's a little bit strange for me that people are still sitting in a hall and looking at a screen. How important is it to you that your work is what you see on the surface, whether it's smoke or a cinema screen? I brought my daughter with me, and it was an experience for us to come close to you as a performer, become part of the work, watch how you do it and see your projection through you, from behind your back.

**Aurélie Percevault:**
I usually prefer to hide behind a projector. [laughs] I also have the feeling that loading a loop is not something very interesting. On the other hand, I do workshops with kids, and I really like to explain how it works. I don't find that interesting, but it's true that sometimes people say that they like to see how it's done. And also the projectors are beautiful. I have mixed feelings about it because I think it's a way of not being seen, of hiding behind the projector.

**Jan Kulka:**
Just as our approaches differ, so do the preferences of the audience. Some might choose to sit at the front and just see the screen without being disturbed. Others might be curious about what you're doing. So they sit at the back and watch you more than the screen. And it's nice that you can choose how you want it.

I would also like to go back to what Guy was saying. My goal, my ideal is simplicity. If the work speaks for itself or is so intense that you can just observe it without thinking about it, that's ideal. Just look and wonder—that's my goal. Although my machine may look complicated, it's just a collection of simple things. That's my little addition.

**Lynn Loo:**
I was there when your daughter was curious about film loops. It was very sweet. I like to communicate with kids and show them... 24 frames per second and all that.

Curiosity is the keyword. We don't want a passive audience. That's why we do this kind of work. I love commercial films, I like watching those as well, but these films require the audience to watch actively. I want the audience to be curious, so curious that they come and talk to us and find out how things work.

**Elena Pardo:**
As Lynn was saying earlier, part of doing this is also showing the machine to everybody. And you can think, 'Oh, I can do this', or 'I can relate to what she's doing'. I think it's important that people can see this and not think it's just a regular film that you might have edited before. It's interesting if people can walk around. The projectors are so noisy

that I think everybody realises that it's happening there. But sometimes people don't realise the musician is there, for example, and they are surprised at the end – 'Oh, this was happening live?' I think it's nice that you're physically present and people realise that. It's very physical.

**Ulrich Ziemons:**
Thrill seekers, all of you. [the whole room laughs]

This goes back to the core, what it's like at the heart of all of your processes: you are physically present while it's happening, and it goes through you, and a connection is being forged with the audience, with the space, with the material that you're working with.

We would now like to thank everybody for coming and Process for creating this platform for all these good, and bad, and exciting and thrilling experiences.



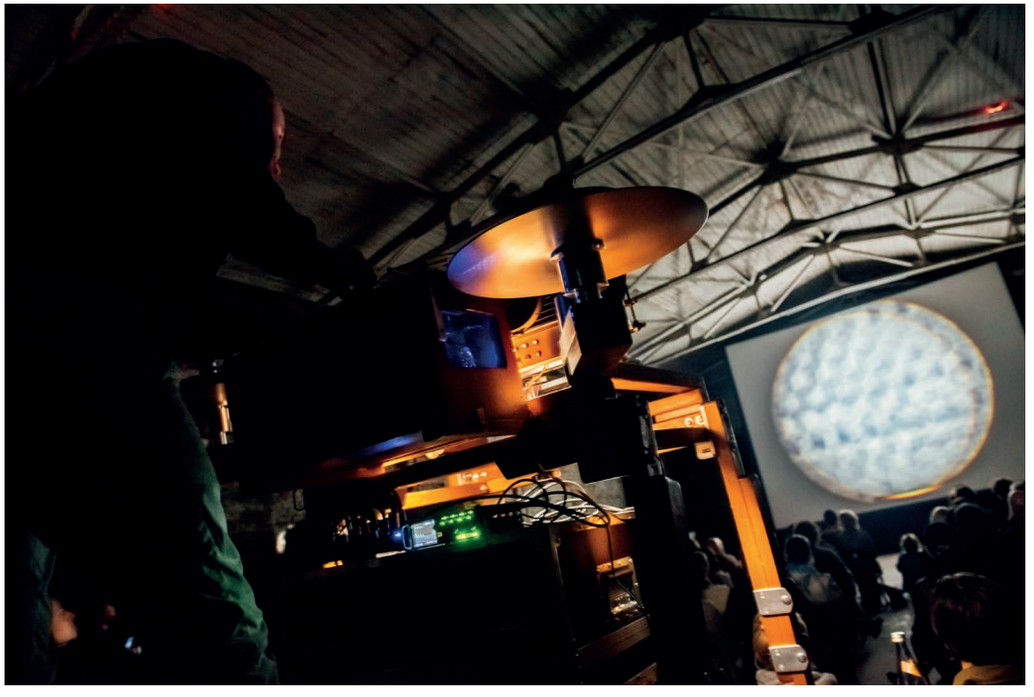

Fig.5 *Patterns* by Jan Kulka. Process festival 2023, © Tomas Terekas
Fig.6 Guy Sherwin and Lynn Loo. Process festival 2023, © Tomas Terekas



# Laia — Torre

# *Primal Light*

## Porto, Portugal



Let's begin by imagining fire as the first imagetic vision of the world. Through its light, and for the first time, an image is announced. Fire can be conjured up as an element that enhances the infinite manifestations of the visible: the circle of fire being a collective space for visions. And if, through the darkness of night, fire gives birth to the primordial image, then perhaps printing by contact is the first representation of matter through light. Nature is thus emancipated in its imagistic representation in the phytograms thanks to sunlight, whose action on matter enhances the manifestation of plants' agency in their own self-representation.

In this multi-handed essay, with eyes open, with eyes closed, we depart from primordial ways of creating images through light and arrive at the device as an altered dimension of reality. Appreciating matter in its own agency allows us to contemplate the potency of practices of attention and care, deepening our sensibility. Moving on to the luminous apparatus, sometimes of magnification (from the micro to the macro) and at other times of exhibition (removed from the traditional space of the cinema room), we may practice the projected light to evoke the gathering of people around a fire. Out of the darkness, the light that shapes the image also signals the environment surrounding us, in an encounter between the real, the sensitive and the immeasurable possibilities of imagination.

Primal Light was the premise and invocation of Laia — Torre's journey within the SPECTRAL project. In this context, artist residencies were developed, challenging artists to interpret the environment and their surroundings as a source of primal light, time and movement. From the absolute luminosity of the sun to the total darkness of the laboratory, there was also room for inventing illusory realities in which light plays a primordial role. The following essay showcases some of these creations, without intending to be exhaustive or rigorous in its cataloguing. Instead, it aims to awaken us to the multiple manifestations of the idea of Primal Light, tracing relationships and connections between images and light within the natural environment, in a drift through forms of creation, devices and exhibition possibilities.

*Once I have been willing to travel in darkness, to the center of the earth, I find precious coals, metals, stones, and all the elements necessary to life.*
*I also find fire, and without fire no creation is possible, for fire makes coalescence.*
*Fire, earth, and water are all parts of creation, passion, experience, flow.*

Anaïs Nin

# Fire Invocation
## (the screening is feral)

Sílvia das Fadas

Each time, a small group of women offers to host the screening. Some set up the screen amidst the trees, asking the living spirits for permission. Others assemble the projection table and the film projector on top. The generator is placed as distant as possible in the bushes, and between the projector and the screen comes the fire pit, with a generous pile of wood and branches.

[It is a portal.]

That the fire is on and the screening is feral, circulates by word of mouth. As it gets darker the other women arrive, and the animals arrive. Together, we sit or lie down on the forest ground, rooted close to one another, expectantly wondering.

Oh fire, let us all gather around you, warming up our spirits and our bodies in these merciless times. The screen is here, the projector is here, the film is here, we are here, and so are you, primordial fire, you too are here. The shadows of our ancestors, we greet. The spirits of the women who burned for their fiery wisdom, we greet. The fire guardians, we greet, along all the living world. We welcome the images, the projected ones and those which take shape in our own minds, induced by the fire in our roving spirits, in multiple exposures and diffractions.

Immersed, we look up at the screen, and the starry sky. From time to time, a shooting star. The sound of the film all-surrounded by the cicadas. From time to time, a bat, a swallow, thousands of insects enamoured of the light. Lynxes and wild boars in the vicinity, hungry and curious as us for the images of the world.

Can a holding critique, the meaning of communing, the shared experience, be reclaimed through fire, through cinema? And can fire and cinema reclaim it back from us, through us? "We're foolish dreamers of the environment", a Black poet once said. "We had visions of a healing cinema", she once said. That's how it started: terrestrial, held in secrecy.

That's how it started: at the margins, away from the cities. We started remembering what we had always known: our eyes do not want to close at all times. When we can no longer foresee, we come to the fire. And each of us remembers that she's a seer, a storyteller. Seasonal food and herbal beverages are always shared. We stay vulnerable and affectable around the fire, long after the film has ended. And each of us speaks and listens in turns, initiated and transfigured by the fire and the cinema, ready to ward off the collapse. Together.

Oh healing fire
devastating fire
primal light embracing us.





*There are images that take shape at an implausible distance. They float in space, their elusive contours vaguely gilded by a sun that cannot break through the dark horizon line. It gilds them from afar, and they hover in a haloed enchantment.*

Teixeira de Pascoaes

# Prima Materia



# Apparatus







# Total Darkness

*In the air that shines and in the*
*wind that passes, a river thicker*
*than a grassy prairie,*
*A trembling river like a flame.*
*The Douro, full of shadow and*
*fires, of silence and rales,*
*loses its waters in the vast*
*bosom of the seas.*
*Where are they, the waves*
*embraced by light, sunk in black*
*waters?*

*And what soul should one wear*
*without stars?*

Gaëlle Rouard

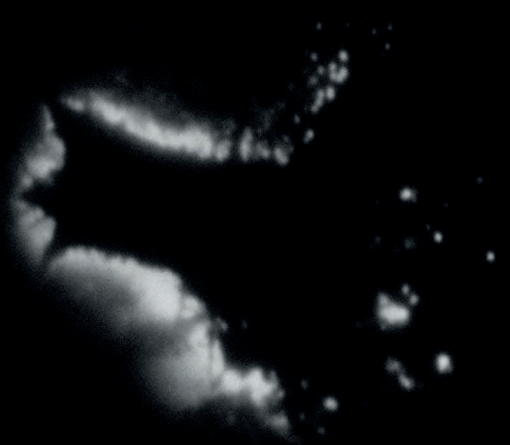

Located in the medieval downtown of Porto, the Laboratório da Torre, opened its doors with the beginning of the SPECTRAL project, in 2022. Emerging from the Laia filmmakers' co-op (founded in 2019), is was created by many analogue film enthusiasts who donated equipment and shared their knowledge to establish a place dedicated to photochemical image, and the organisation of screenings, workshops and artistic residencies.

'Laia', a Portuguese slang word, often used to describe collective characteristics or behaviours that are frowned upon or misunderstood, Laia is a co-op whose work is nourished by such energy, instigator of new perspectives and production strategies in cultural cooperation and moving image. www.laia.pt

Laia — Torre team for SPECTRAL:
Laetitia Morais, Mónica Baptista,
Rita Morais and Sofia Arriscado.

We deeply thank all the members and friends of the Laboratório da Torre, and the team at Batalha Film Center, as well as the international film lab community, whose help has been essential in establishing the lab, all the artists who have created new Expanded Cinematic Arts works in this new lab, and all the artists who participated in the Primal Light residencies and other SPECTRAL activities.

Texts:

1. Introduction text by Laia Co-op
2. *Fire Invocation (the screening is feral)* by Sílvia da Fadas.

Quotes:

1. Anaïs Nin, *The Diary of Anaïs Nin – Volume IV, 1944–1947.*
2. Teixeira de Pascoaes, *Livro de Memórias*, 1927.
3. Gaëlle Rouard, *Beira Douro*, 2024.

Images:

1. *Miragem — kinematic arts in the landscape*, island of Pico, Azores, an exhibition project by Rita Morais. In the photo is a screening of *Light, Blaze, Fulgor — Auguries for a Non-Hierarchical Framing and Flourishing* by Sílvia das Fadas, in the forest of dragon trees on Pico island. © miragem by Artur Castro Freire.
2. *Idem.*

3. *The day as a perpetual morning*, Mónica Baptista, 35mm still, film installation with double projection, pairing a 16mm reel with 35mm slides in a loop.
4. *Idem.*

5. Wandering projection picture by Mire & Laia — Torre SPECTRAL programme in collaboration with S8 – Mostra de Cinema Periférico 2025. © s8cinema by Andrea Morandeira.

6. *Nanacatepec* – expanded cinema film performance, directed and performed by Elena Pardo and Azucena Losana, with music by Tomás Novoa. Produced by LEC, Crater Lab and SPECTRAL in 2024.
7. *Idem.*
8. *Idem.*

9. *Beira Douro*, Gaëlle Rouard – still from 16mm film performance produced by Laia Co-op at Laboratório da Torre in the scope of SPECTRAL in 2024.

10. Scratch card.

# Crater-Lab

# *Expanded 360 Crater-Lab. An Immersive Drift*

by Yago Alcover

## Barcelona, Spain

## INTRODUCTION

*"Motion pictures, if nothing else, help us to re-experience our experiences."*

**Stan VanDerBeek**

This text summarises the extraordinary experience that has been Crater-Lab's involvement in the SPECTRAL[1] project from its beginning in 2021—when meetings started between Filmwerkplaats (NL), Mire (FR), LaborBerlin (DE), BAL (LV), Crater-Lab (ES), and Laia — Torre (PT)—to its planned conclusion in 2025. Over these years, not only has Crater-Lab evolved, but the landscape of expanded cinema in Europe has also undergone enormous revitalisation. Highlights include residencies, tours, temporary spaces for the creation and exhibition of expanded cinema, the development and improvement of devices for new works, workshops, collaborations with major institutions and festivals that do not usually include these practices, invitations for artists from all over the world, tributes and reenactments of performances. The network of labs has been significantly strengthened and new possibilities for similar future projects have opened up. Clearly, the global independent film scene has entered a new chapter of resilience, demonstrating a remarkably strong and collective spirit.[2]

When we started developing our potential lines of research and activity for this expanded cinema project, countless possibilities emerged, most of which revolving around the idea of the screen: how to go beyond it, overflow it, transform it, confront it, challenge it. The screen as both curtain and structural axis of projection—its very materiality. As we engaged with that materiality, we realised, as many before us had, that the screen itself is the fundamental challenge in the construction of projection.[3] We ultimately decided to build the entire project around *immersion* as a way to break through the traditional cinematic screen and projection model boundaries. We explored immersion through two core concepts: a 360-degree panoramic screen and a device that enables analogue filming via an articulated arm capable of motion along three axes. For us, these two ideas encapsulate the key pillars of expanded cinema: decentring projection, overflowing its limits and blending expressive media.

These lines aim to be a testimony, a summary of the activities carried out, their references, their protagonists and participants, and ultimately a tribute to the experiences of these past years. We also wanted to leave a trace—an imprint—of a particularly significant chapter in the eleven-year history of this independent lab, which was established in Barcelona in 2014 and is committed to continuing this microhistory. This essay has been conceived as a living, evolving

1 https://www.spectral-cinematics.eu.

2 The following studies provide key references on the contemporary context of artist-run film labs: Rossella Catanese and Jussi Parikka, *Handmade films and artist-run labs: The chemical sites of film's counterculture* (2018); Pip Chodorov, *The artist-run film labs* (2014); Kim Knowles, *Analogue Matters: Mapping Artist-Run Film Labs in Europe* (2013); Marcy Saude, *Old Weird Materialism: Production and Distribution of Artist Film* (2018); Mariya Nikiforova, "The Abominable Community. Notes on Independent Filmmakers' Laboratories", in *World Records*, 2020, Vol. 4 ("Documentary World-Making" by Josh Guilford and Toby Lee), p. 189; Elena Duque, *Celuloide y autosuficiencia: laboratorios autogestionados por artistas* (2016).

3 Crater-Lab's residency programme under the SPECTRAL project was subtitled *Screen*, and the main theme or selection criterion for participating artists was proposals involving innovations and deviations from traditional film projection.

text. It includes multiple quotations and links, as well as QR codes, all intended to make the reading experience more flexible and expansive, overflowing even the boundaries of the page itself.

Long live living, organic, sensory, cosmic and expanded experiences. Long live the uncompromising artists and collectives who unite in resistance to reclaim battlefields rooted in matter itself through culture and aesthetics. And long live, above all, the present and future of photochemical cinema.

## HISTORICAL 360 PRECEDENTS

The first phase of the research was retrospective, returning to the origins. Early examples that pointed the way towards this circular screen that shapes the space from which we chose to approach the expanded question. These discoveries of pioneering works can be understood as a constant throughout the history of experimental cinema: we look back to uncover traces and reinvent from there. Reclaiming the origins—even the pre-cinematographic—as a resource for innovation implies transfiguration. The spirit of the pioneers acts as a hinge, mobilising the sense of disorientation that has always accompanied those who explore cinema based on its radical and specific nature. Artists, researchers, technicians and filmmakers have persistently, profoundly and rigorously asked what could be the singular and distinctive form of cinema as an artistic form. These are the same people who reject the spectacular drift of cinema and its industrialised aspect, those who turn their backs on institutionalisation and often find a mirror in the spirit of the pioneers. The cinema of the origins is therefore taken here as a touchstone for avant-garde cinema.

The first step in our research involved revisiting the cyclorama as an overflowing screen, as well as domes and planetariums. These spectacles, which are part of the early history of photographic, cinematographic, and pre-cinematographic art, and which are framed within what Tom Gunning defined as the *cinema of attraction*[4], constitute the very materiality of the set of devices that envelop the film phenomenon. This aspect of attraction, of cinema as a pulsating art of motion, is the first indication of the immense contradiction posed by the stagnation and immobility of film projection. Single-channel, front-facing projection is in itself a reduction, a severe limitation of the medium's potential, a sign that the medium has been constrained from the start. Thus, we wish to highlight the long-standing coexistence of conventional rectangular screens alongside multiform screens, which required and still require alternative projection formats.

The cyclorama, already explored in 18th-century painting, was also used in painting, photography and stage design, always under the common paradigm of placing the viewer at the centre. This produced an illusion and focused on the sensory-impressive aspect of the visual. These works were almost always accompanied by music or narration, and from the advent of cinema onwards, adaptations to the new art form began to appear. In film specifically, the idea of circularity and cylindricality is already formally present in devices such as the zoetrope, thaumatrope, and phenakistoscope. As early as 1910, Futurists Bruno Corra and Arnaldo Ginna had envisioned screens made from materials other than fabric—screens that would not merely be inert surfaces for repetition, but active elements in their own right: volumetric, mobile, coloured screens.[5]

By the mid-20th century, José Val del Omar had developed the concept of 'apanoramic overflow of the image' (1957)[6] and there were phenomena in other disciplines, such as psychedelic art. Brion Gysin's Dreamachine[7] (1959), for example, explored circularity and immersion as forms of sensory expansion along the lines of the Joshua Light Show and Single Wing Turquoise Bird. Similarly, in the late 1950s, Jordan Belson and musician Henry Jacobs organised a series of audiovisual concerts based on surround sound with up to forty speakers, known as the Vortex Concerts, and projections adapted for planetariums and domes with up to thirty devices. These enabled multiform projections, combining static and moving images to cover as much projection surface as possible.

In many mid-20th-century projects, multiple projections surrounded the audience, shaping the artistic space from a communal and extended-narrative perspective. In happenings or expanded formats, they embraced concepts of spatial renewal in favour of the collective and improvisation. Expanded cinema not only invites us to reinvent the spatial dimension of the apparatus, but also its temporality and narrative. It begins by embracing openness, ambiguity, sensuality, and the affirmation of chance, the unexpected, and improvisation applied to a kind of cinema that is performed or created as live art. "Improvisation is, I repeat, the highest form of concentration, of awareness, of intuitive knowledge, when the imagination begins to dismiss the pre-arranged, the contrived mental structures, and goes directly to the depths of matter."[8] This aspect of live art was also recognised by Stan VanDerBeek, one of the key figures in the early days of expanded cinema: "You never knew what you would see, you never knew what would happen, you never knew what you would experience." Expanded cinema as an art of opportunity and potentiality in the moment of projection.

Of all the possibilities of overflowing screens, our drift began with a set of concepts proposed by VanDerBeek. A pioneer in mixed media, this visual artist created many transmedia works combining film with dance or painting. Above all, we must highlight his immense and unfinished project *Movie-Drome* (1964–1965). "Built from a silo, it took ten years to construct the dome—a projection space, a structure, a chamber where up to thirty images could be combined simultaneously. Spectators were to lie around the perimeter as the

4 Tom Gunning, "The Cinema of Attraction: Early Cinema, Its Spectator, and the Avant-Garde", in *Wide Angle*, Vol. 8, Nos. 3–4 (1986).

5 Nicole Brenez, *Cine de Vanguardia. Instrucciones de uso*, La Fuga, 2021.

6 "The cinematic screen is a large apanoramic retina with spherical, concave, enveloping perspective. The lines of movement that the viewer can follow across its surface are minimal." — José Val del Omar, *Panoramic Overflow of the Image*, speech at the IX Congress of Cinematographic Technique, Turin, 1957. In: *Escritos de técnica, poética y mística*, José Val del Omar. La Central and Museo Reina Sofía, 2010.

7 https://dreamachine.world/about/.

8 Jonas Mekas, "Notes on Some New Films and Happiness", in *Film Culture* 37 (Summer 1965), p. 15. Also in: P. Adams Sitney, *Visionary Film: The American Avant-Garde, 1943–2000*, 3rd Edition, Oxford University Press, p. 329.

Fig.1 *Eon Solar* at Alud! Festival of Expanded Cinematic Arts #2, 2022, Barcelona
Fig.2 *Oscillation in Sight #2*, 16mm Motion Picture Panorama, at Worm, 2024, Rotterdam



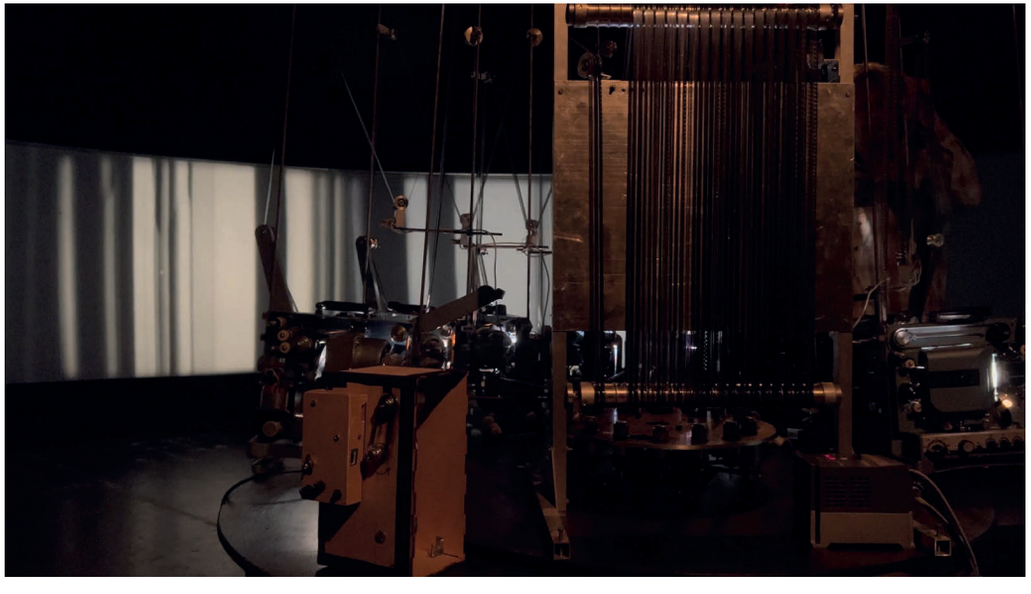



Fig.3 *Grande Finale 360º* Motion Picture Panorama, 2020, Rotterdam
Fig.4 *El Sexto Sol 360º*, at Planetario Pamplona, Punto de Vista festival, 2019, Pamplona



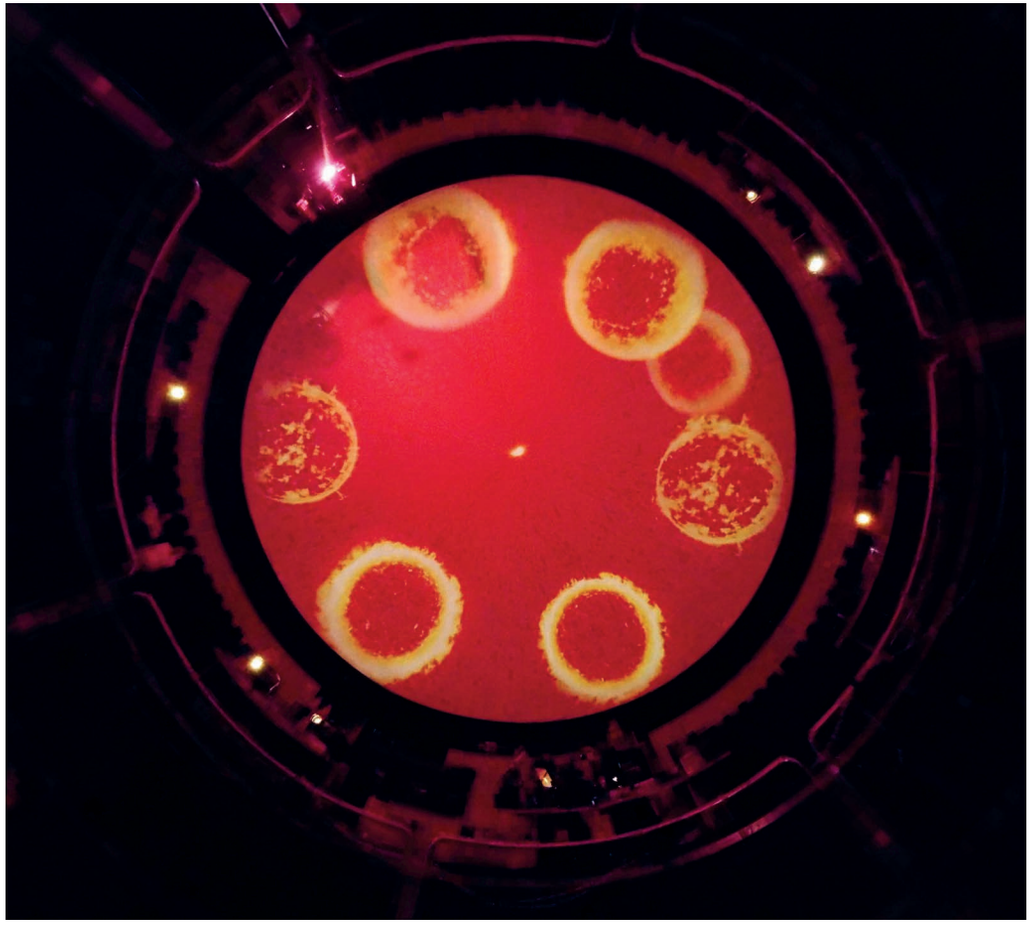

images 'wrapped around, enveloped, and encapsulated' the audience, like a mid-60s time machine."[9] This habitable time capsule exemplifies the expanded and inhabitable concept in a practical way, focusing definitively on the experiential, affective cinema VanDerBeek envisioned as a form of resistance to the militarism and global crisis of his time: "It is very important that art and life... interact and keep the social process self conscious." The role of art is therefore deeply rooted in what the American artist defined as its international language and transcendent experiential potential.

Another historical example can be found at the 1967 World Expo in Montreal, where Jeffrey Shaw presented *Movie Movie*, a large-scale expanded cinema piece that incorporated an inflatable screen into the building's architecture. Crater-Lab also followed the work of Ant Farm, an experimental architecture group founded in San Francisco in 1968 by Chip Lord and Doug Michels, who were later joined by Curtis Schreier. Their work intersected architecture, design and media art. Their installations criticised North American consumption and cultural ideology. They produced works of various kinds, including agitprop, video art, installations, performances, events and manifesto readings.

## CONTEMPORARY 360 PRECEDENTS

The planetarium has been an alternative to traditional cinematic spaces, offering an immersive film experience. In recent years, several European artists have conducted research and carried out projects focused on reviving these parabolic multi-projections, recovering one of the great light-based spectacles of the 20th century. Overcoming two fundamental challenges—constructing large-scale grid compositions and calculating screen coverage for massive surfaces—Luis Macías created the piece *El Sexto Sol*, which was presented at the 2019 edition of the Punto de Vista Festival, at the Città della Scienza Planetarium in Naples in 2024, and at the Centennial Planetarium in the scope of the 2025 edition of Contemporary Calgary.

*El Sexto Sol* is an immersive, live cinematic experience that explores humankind's cosmovision, our nature, and our need to understand the world in order to control and destroy it. It proposes a return journey towards a mythical future of creation. Designed for a 360-degree projection system specific to domes and planetariums, this expanded cinema piece is performed by multiple filmmakers and musicians and it explores improbable landscapes of suns, moons, planets, constellations and other cosmic elements. For the project, original footage was combined with archival images from the planetarium, and copied and transformed using a specially designed Oxberry optical printer for slides. Various slide projectors controlled by Luis Macías were used to explore the dome. He was joined by Xavier Querel (France) and Miguel Puertas (Spain), who used eight 16mm projectors along different lines of the dome. The planetarium's original Zeiss optomechanical projector with 160 lenses was also employed, as were other optical projection and analogue special effects devices that had previously been used in these pre-digital spaces focused in science and education.

Sound artist Alfredo Costa Monteiro positioned thirteen speakers around the panoramic space to create a spatial sound composition with his electroacoustic setup.

Other editions of the Punto de Vista Festival in Pamplona, under the direction of Garbiñe Ortega, also featured planetarium screenings. In 2023, *Kosmogonía*, a 35mm performance piece in single-channel projection by Madrid-based artist Deneb Martos, was shown. Martos was accompanied by musical improviser Wade Matthews, a frequent collaborator. While not strictly immersive, we consider important to mention these works due to their relevance and contemporaneity.

Our research also led us to various works by VanDerBeek made for planetariums, including *Cine Dreams* (performed in New York in 1972, Milan in 2014 and Rio de Janeiro in 2015) and *Cine Naps* (performed in South Florida in 1973).

It's worth noting that this text focuses on the outcomes of research centred on works created using analogue methods. However, we also encountered works created using digital media, ranging from regular planetarium programmes to various experiences in domes or panoramic formats. Not only at film festivals, but also at digital art and electronic music festivals such as Sónar and MIRA. Porto/Post/Doc, another European film festival, has also consistently presented immersive planetarium experiences in digital formats.

The Portuguese duo João Maria Gusmão and Pedro Paiva presented six pieces—*Pôr do Sol* (2017) and *Camelos no Egipto*, *Torneira*, *Quadrado branco a saltar sobre quadrado verde*, *Neve* and *Laranja Verde* (all from 2018)—at the Calouste Gulbenkian Planetarium, in Lisbon, as part of Portuguese curator Cláudia Ramos' proposal, *Estudos do Labirinto*.

Other contemporary references were key to our research into panoramic screens. Dutch filmmaker Esther Urlus created *Grande Finale*, a piece conceived for a 360-degree panoramic screen measuring one metre in height. Drawing inspiration from 19th-century battlefield cycloramas, this installation creates the illusion of panoramic continuity from a film shot using a single 16mm camera. Assuming that the camera's movement would mirror that of the projection, Urlus and film technician Nico Komen adapted the installation for a projection setup of 16 synchronised Eiki projectors that display the film in sequence and loop. The result is a continuous 360-degree landscape that recreates a period scene featuring riders on a battlefield. The screen and setup have been presented in several editions of Back to the Future. Several artists have been invited to produce or adapt in an expanded or installation format as part of Filmwerkplaats' SPECTRAL Residency Programme: Lichun Tseng (*Lang*, 2017), Richard Tuohy and Dianna

9 Daryl Chin, "Down Memory Lane: Found Forms", in *Stan VanDerBeek Retrospective in Anthology Film Archives*, 1977.

Fig.5 *Lang*, 16mm Motion Picture Panorama, at Back to the Future Festival, Rotterdam
Fig.6 *Is not the sun who is moving*, 8 x 16mm Motion Picture Panorama, at Back to the Future Festival, 2025, Rotterdam



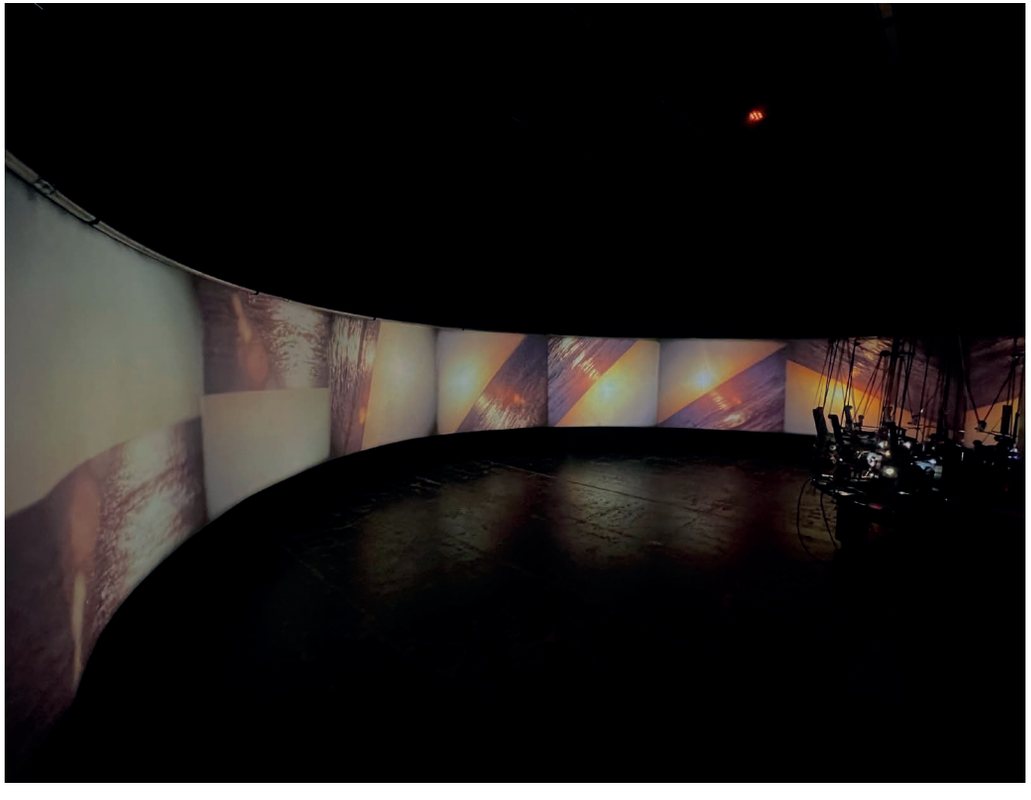



Fig.7 360º panoramic screen designed by Crater-Lab in collaboration with the Elisava School of Design, 2024, Barcelona



Barrie (*Everyday Traffic*, 2023), Nan Wang (*Oscillation in Sight #2*, 2024) and Luis Macías (who used the 360 Hyperlapse Camera to shoot *Is not the sun who is moving* in 2025 and screened it with the 360º Motion Picture Panorama at the 2025 edition).

A significant discovery in our research was the historicist installation *Tabula Rasa*, by Mònica Rosselló and Jordi Guillumet, exhibited at the Centre d'Art Santa Mònica[10] in 2021. For this project, the Catalan duo used a 360-degree panoramic screen coated in emulsion, onto which black-and-white slide projections were shown sequentially. The photoluminescent clay covering the screen briefly retains the image after each slide passes, delaying its disappearance. This effect highlights the latent nature of the light image. The transition from flash to latency to fading reveals the temporal qualities of instantaneous images, thereby enhancing the memory-like nature of photographic imagery.

The Grenoble-based collective Metamkine also created *Le Cube* in 1996, staging multiple performances until 2007. The project was initiated by Chris Auger, Christophe Cardoen, Xavier Quérel and Gaëlle Rouard, responsible for the light compositions, films, and shadows. Live electroacoustic sound was performed by Lionel Marchetti and Jérôme Noetinger. The project stemmed from a collaboration between Metamkine, Atelier MTK, Christophe Cardoen and Lionel Marchetti. *Le Cube* is an eight-hour expanded cinema piece in which the artists perform inside a translucent cubic structure. This rotating group has engaged in a continuous recycling of images in combination with live projection, offering a constant exercise in variation. Of all their work, *Le Cube* and its presentation on the panoramic screen designed by Crater-Lab are perhaps the most representative of immersion.

Another artist who has worked on immersive elements or circularity in recent years is Hrvoje Spudić, who participated in the 2022 edition of Alud! Festival of Expanded Cinematic Arts.

10 https://www.santamonica.cat/ca/exposicions-i-activitats/activitats/2021/visites-guiades-atabularasa.



## RESEARCH AND DEVICES

### 360 PANORAMIC SCREEN

The first device to be planned and built was the panoramic screen. After exploring various lines of research, including domes, panoramas and even inflatable screens, and following the initial presentations to the SPECTRAL project partners in the summer of 2022 a full-scale prototype was first assembled in October 2022, coinciding with the second edition of the Alud! Festival.

By the end of 2023, Crater-Lab launched a call for students and researchers at the Elisava School of Design to collaborate in the structural and material development of an improved, full-scale prototype of the screen. The goal was to present the final version—a modular, portable screen that could be easily assembled—at the 2024 edition of Alud!. The programme for that year also included a meeting of SPECTRAL project partners and a presentation on advances in device development.

After evaluating several design alternatives, the team opted for an oblique structure capable of counterbalancing opposing forces and calculated that the structure would require eight radial arms. One of the main goals was met: the structure weighed less than thirty kilograms, allowing it to be easily assembled, transported, and mounted on a central column or suspended from a single support point. The final structure was built using prefabricated aluminium parts. This choice was critical, as the mass-produced components meant that no custom pieces were necessary, making it easier for the wider film community to build their own panoramic screens.

Organic cotton fabric was selected for the screen material—heavy and firm enough to allow the projection to be visible from both inside and outside the panorama. The full-scale design required fabric measuring twenty-five metres in length and three metres in width.

The design and construction phase took place between November 2023 and April 2024. The first assembly tests were conducted at the art centre Hangar.org in May and June 2024. A manual for screen assembly in English was also developed. The project was officially presented in October 2024 in Barcelona, during the fourth edition of Alud!.

### 360 HYPERLAPSE CAMERA

The second device designed as part of the project is a robotic camera. The project consists of two parts: a camera controller and a module that enables 360-degree panoramic filming across all three rotational axes. This initiative evolved from previous research, including films by Michael Snow, immersive rotating systems created by Czech artist Hrvoje Spudić, Esther Urlus's 360-degree panoramic filming and sequential projection system and the work of Luis Macías with rotating devices in films such as *The Infinite Sundown / Sun II: Earth* (2020–2025).

Fig.8 Print from the Pamplona Planetarium's archive, as part of a project for an immersive performance. 12 x 35mm colour slide, Pamplona Planetarium, 2019

Fig.9 Design Schematics of 360 Panoramic Screen designed by Crater-lab, 2025, Barcelona



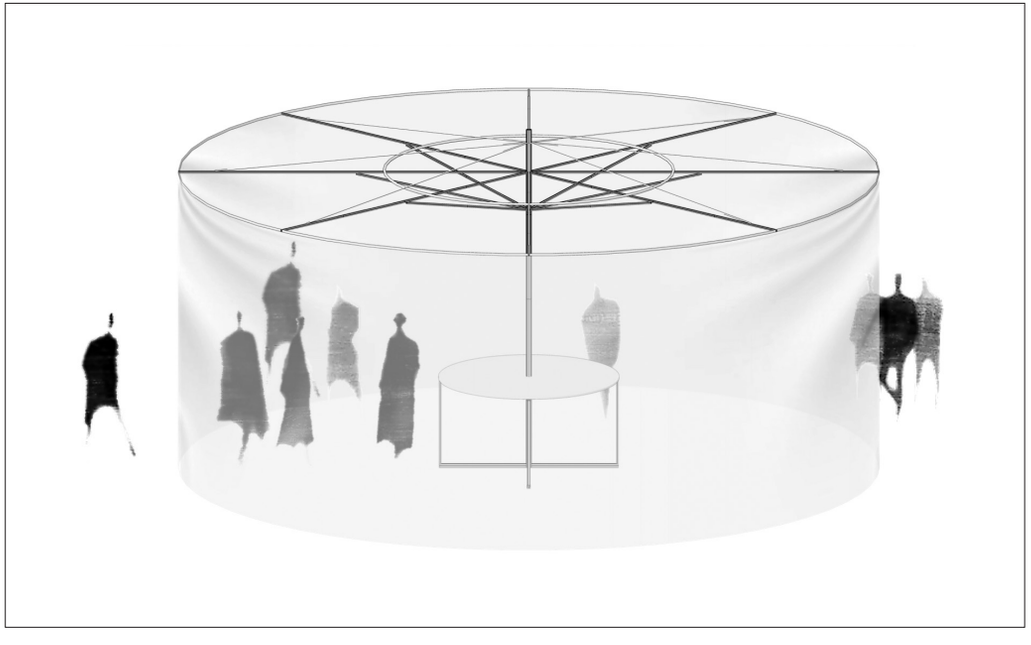



Fig.10 *A talk with the projector*, visual poem by Luis Macias.

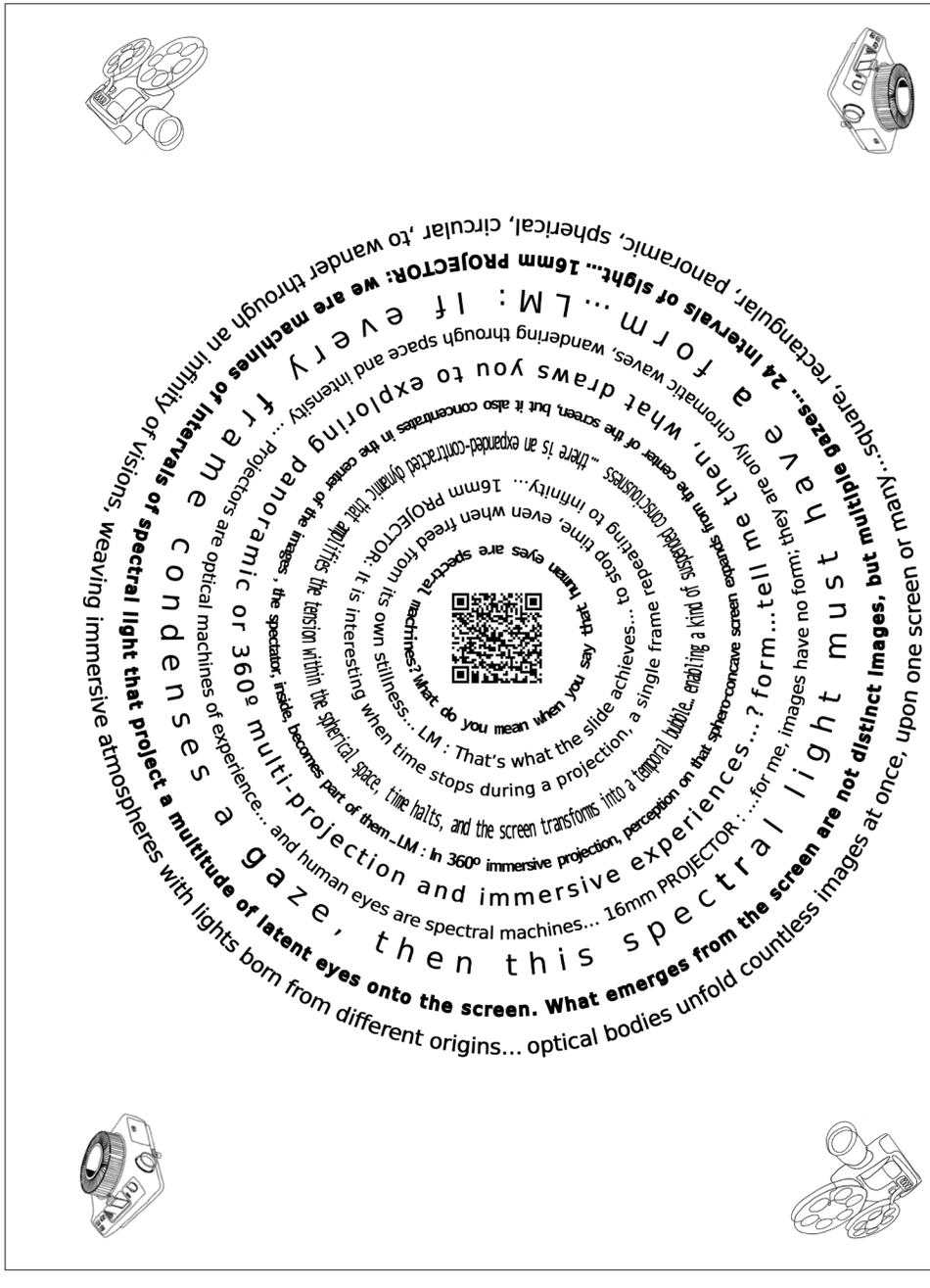

Fig.11 360º Hyperlapse Camera shooting tests, 2025, Barcelona





Fig.12 *Komorebi*, at Alud! Festival of Expanded Cinematic Arts #3, 2023, Barcelona
Fig.13 *Rotoprojector*, at Alud! Festival of Expanded Cinematic Arts #2, 2022, Barcelona

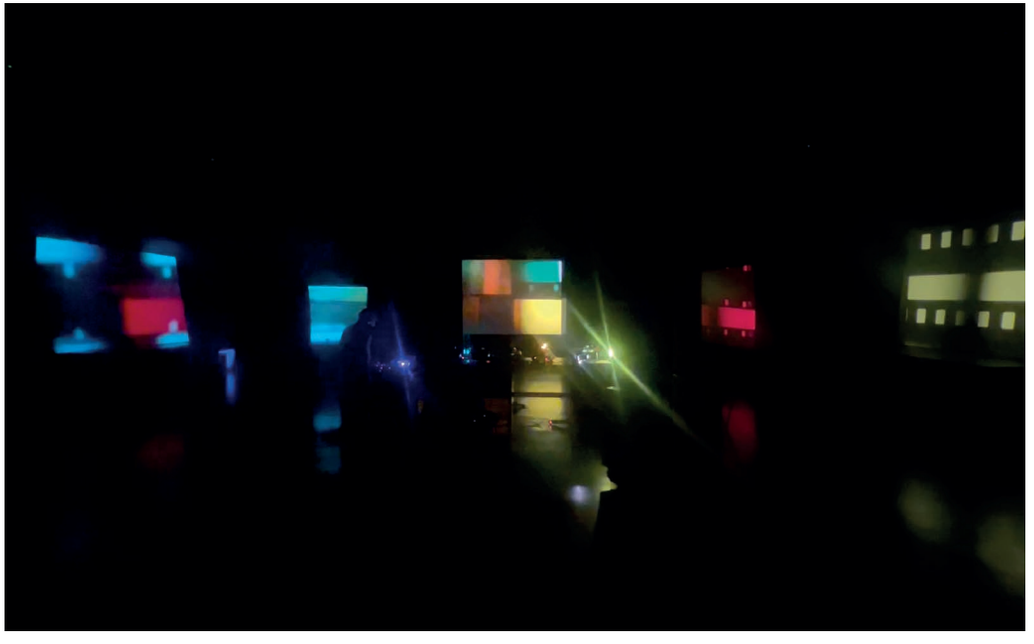



The design of the camera was partly inspired by the intervalometer developed by American researcher Matt McWilliams[11], who joined Spudić and members of Crater-Lab to create the original design for the device. They collaborated on the initial designs and early development phases in 2022 and 2023, but the team later decided to move forward with engineer Miguel Ángel de las Heras, who leads the multimedia lab at Hangar.org, the artistic production centre where Crater-Lab was a resident collective from 2020 to 2024 and where the lab was hosted during most of the SPECTRAL project.

The design was inspired by the device used by Michael Snow in *La Région Centrale*, his well-known Camera Activating Machine. Snow's film was a key reference in our research, though we also considered other influential works that revolve around ideas of rotation and overflow. At the opening session of Alud! at the Filmoteca de Catalunya in 2023, which featured a screening of *La Région Centrale*, there was a presentation referencing films where immersion and formal inquiries into the limits of the frame, especially in relation to circularity and 360 degrees, play a central role. Works cited in the presentation included: *Spacy* by Takashi Ito, *La Chambre* by Chantal Akerman, *Artifices #1* by Alexander Larose, *360 BCN* and *360 Rotterdam* by Anne Marie Cornu, *Home Movie*, *A Day in the Bush* by Arthur and Corinne Cantrill, *Pan* by Johan Lurf, *Sintitulo (focus)* by Pablo Marín, *Intento de vuelo fallido* by Carlos Castillo, *Wind Vane* by Chris Welsby, and the installation *Light Describing a Cone* by Anthony McCall. Other works by Snow mentioned included *Back and Forth*, *Standard Time* and the publication *Cover to Cover*.

The first prototype of the 360 Hyperlapse Camera was presented in Toronto in May 2023. It featured a motorised system that enabled rotation along one panoramic axis. This took place during the Analogue Resilience: Film Labs Gathering[12], an international meeting of labs organised by LIFT. The event included a showcase of devices. Crater-Lab presented this early prototype, a showcase of devices and a short black-and-white film. It was developed using a device invented by Robert Schaller and printed with a prototype of a contact printer developed by Filmwerkplaats as part of the SPECTRAL project[13].

The second prototype, which includes both the camera and the rotation module, was ready for its first tests in September 2024. The intervalometer operates via software that can be controlled remotely through any Wi-Fi-enabled device. It can manage all functions of a Bolex camera, including motor direction, variable shutter, filming speed, frame-by-frame control, and complex shooting sequence programming. The prototype also includes a lens control unit that enables the remote adjustment of all three lens rings: focus, aperture and zoom. Additionally, a small video camera has been integrated into the Bolex viewfinder to enable remote visual monitoring on a computer, tablet or phone. All these functions can be managed independently or synchronously, vastly expanding the possibilities for creative and programmed filming. Synchronisation applies not only to the camera's internal functions, but also to the rotational movement module, allowing the camera to shoot at any speed while varying exposure, speed and focus as it rotates in any direction. With the shutter closed, it is also possible to rewind for multiple exposures.

The second part of the design is the 360-degree motion control module for the camera. Consisting of an articulated arm with three motors, it enables remote manipulation, allowing the camera to rotate across three axes while mounted on a tripod. The module can be operated either by programming shot parameters or manually using a joystick.

The next phase of the project involves integrating sensor-based activation using light, sound and other photocells, as well as a solar-powered battery to ensure energy autonomy. Another planned feature will enable complex sequence programming, allowing the device to operate autonomously over extended periods.

## ALUD! #2 2022, FIRST IMMERSIONS

Having reviewed the research and prototyping of the devices that shaped the project, we now turn to the various immersive projects that have been developed and presented as part of SPECTRAL. Particular attention is given to the 2022, 2023 and 2024 editions of Alud!, which served as the most specific and significant curatorial space within Crater-Lab's programme.

The first prototype of the circular screen designed by Crater-Lab was presented at the second edition of Alud! in 2022. With a double-ceiling suspension system and already adapted to the final dimensions (of three metres in height, eight metres in diameter, and twenty-five metres in perimeter), it hosted the works *Rotoprojector*[14] by Hrvoje Spudić and *Eón Solar*[15] by Luis Macías and Alfredo Costa Monteiro.

Spudić's piece, which was created using a device that enables control over the projector's rotation at varying speeds and directions along its own axis, was shown for the first time in Spain. It was also the first time that the filmmaker could project the work onto a circular screen. Previously, he had to adapt it to cubic or rectangular rooms. The cyclorama's continuous, angle-free space provided an ideal surface to observe this device, which challenges the static nature of front-facing projection and focuses instead on rotation, continuity and circular projection.

In the case of *Eón Solar*, the screen was used not only formally, but also conceptually. During the night, over the course of eight hours, audience members reclined on lounge chairs placed inside and outside the screen and experienced a piece featuring eight slide projectors at the centre of the screen and four 16mm projectors at the external corners. This setup involved a dual interior/exterior projection onto the translucent screen fabric. The projectors were modified and

11 https://www.sixteenmillimeter.com.
12 https://lift.ca/wp-content/uploads/2023/05/LIFT-Program-Update-20230518-Resize.pdf.
13 https://wiki.filmlabs.org/filmwerkplaats-diy-contact-printer/start.
14 https://hrvojespudic.net/rotoprojector.
15 https://luismacias.es/eon-solar/.

Fig.14 *LRGNCNTRL*, Crater-Lab's 4 x 16mm projectors version of Michael Snow's *La Région Centrale*, at Alud! Festival of Expanded Cinematic Arts #3, 2023, Barcelona
Fig.15 *Inside-Outside-Around*, at Alud! Festival of Expanded Cinematic Arts #4, 2024







Fig.16 *Metamkine 360*, at Alud! Festival of Expanded Cinematic Arts #4, 2024, Barcelona
Fig.17 *Eon Solar*, at Alud! Festival of Expanded Cinematic Arts #2, 2022, Barcelona

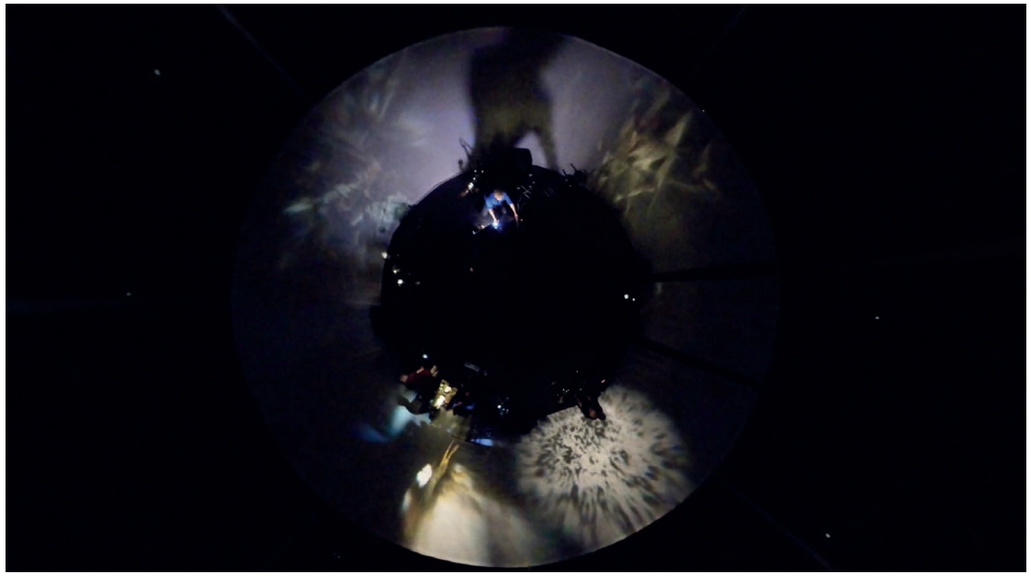



controlled via remote devices to offer another immersive performance exploring human cosmovision and cyclical temporality. The piece is part of a broader project by Macías centred on the pre-Hispanic myth of the Sixth Sun, which includes various films, installations and expanded cinema works. The eight-hour visual and audio experience proposed by Luis Macías and Alfredo Costa Monteiro intended to "enable both artists and audience to experience a particular physical state that serves as a bridge between dream and reality, via a device offering multiple perspectives and angles of audiovisual perception, on a journey to the threshold of consciousness".

## ALUD! #3 2023, THE HOMAGE TO MICHAEL SNOW

*LRGNCNTRL* is an immersive version of *La Région Centrale* created by several Crater-Lab members. It was presented on the last day of the third edition of Alud! and was intended to extend the experience of Michael Snow's work as a tribute in the year of his passing. While the original served as the opening screening of the festival at the Filmoteca de Catalunya, its immersive reinterpretation closed the festival at Hangar.org. The circularity of the film provided the curatorial framework for the festival itself, with Snow's piece literally and symbolically opening and closing the programme.

*La Région Centrale* (1971) is a seminal work of twentieth-century avant-garde cinema in terms of both expression and technique. Once again, it embodies the central concern of experimental filmmakers, artists focused on exploring the specific definition of cinematic language and its infinite possibilities, intervals and limits. At the same time, it confirms the fundamentally mechanical nature of cinema. *La Région Centrale* is a pure device, a machine. Through the activation of its mechanism, its runtime seeks to overflow the boundaries of the film frame and challenge the viewer's perceptual limits.

The immersive version, *LRGNCNTRL*, sought to deepen the original film's nature by multiplying its projection and redirecting its orientation. In doing so, it became an immersive, enveloping phenomenon. Its four screens, each facing a different cardinal direction, diverted and reinterpreted the movements of the original, fragmenting its temporality. This poly-vision both dismantled and amplified the cyclical structure of the original film, coiling it upon itself and countering—while also extending—its mono-directional spherical ambition. The new musicality that emerged when moving from monophony to quadraphony was especially striking, revealing harmonic, timbral and rhythmic qualities that the original version lacked due to its orthodox approach of reproducing the sound tapes that were used to parameterise the movements of the device.

*LRGNCNTRL* also became an essay on the duration of the original film. The use of four reels and four projectors simultaneously reduced the total runtime to under an hour. Having started in unison, the reels finished almost simultaneously, which resulted in a particularly emotional ending as the final reel matched the original film's accelerating rotational conclusion.

In 2023, Luis Macías also presented *Komorebi*, a new piece of immersive work. In spite of not using the 360-degree panoramic screen, it featured six screens arranged in a circle around the audience. Six modified slide projectors, equipped with shutters and motors that controlled the rotation of dichroic glass filters, altered the chromatic waves of slides containing pure colours. The images rotated at different speeds and in different directions across the six screens. The audience—standing in the centre—also became part of the work, interacting with their own projected shadows. For this piece, Macías worked with sound artist Robert Martínez, who used sensors that responded to chromatic and light changes in the projection.

## ALUD! #4 2024, THE LAB'S EDITION

The fourth edition of Alud! featured the public presentation of the circular screen and of several devices, including the first prototype of the 360 Hyperlapse Camera. Several works were shown at Hangar's headquarters during its five-day run at the end of October 2024. The panoramic screen was premiered by the Portuguese musician Alfredo Costa Monteiro, a former member of Crater-Lab who is closely linked to it through his sound work *Indivisibilitat*. The concert, which was created using paper, was conceived by the artist "more as an acoustic sound essay with phenomenological references than as a concert, since it reveals actions and sounds at the threshold of perception and seeks to reveal the materiality and sound properties of paper in its different forms". In two performances for small audiences, the musician placed the audience inside the panorama, interacting also with the projection fabric as an instrument.

The Cellule d'Intervention Metamkine, comprising artists Xavier Querel, Christophe Augier, Loïc Verdillon and Jérôme Noetinger, also performed inside the screen the following day. The last day was marked by the presentation of two works. The first was by the fluctuating collective ZeroPixel—for this performance, the group consisted of Mire members Chloé Beulin, Élodie Ferré, Aurélie Percevault and Erwan Tracol. The Nantes-based collective presented *Zeropixel 360*, a piece for six 16mm projectors and one modified projector, in which a single roll of 16mm film passes a succession of projectors with countdown intervals. Four operators handle it delicately, trying to prevent the film from splitting. Sounds from an optical track of found footage travel through spatialised speakers. The work reflects on the roles of projectionist-operator and artist-interpreter.

The 360 programme closed with a presentation of the work *IN-OUT-AROUND* by Luis Macías, which uses three 16mm projectors inside a circular translucent screen and eight 35mm slide projectors placed in the four external corners of the screen. With a soundtrack by Chilean

sound artist Tomás Novoa, it is a study of a natural landscape filmed over the course of a year, exploring the relationship between its transformations, chromatic changes and the degeneration caused by experimenting with analogue processing of the same immersive landscape. In the words of the artist: “Inside-outside--around a forest in its natural transformation... in the depths of your gaze”.

## ALUD! #5 AND A DRIFT THAT COMES TO AN END

As the SPECTRAL project came to an end, Crater-Lab carried out additional activities involving the research summarised here. The 360 Hyperlapse Camera was presented to the public as part of the Back to the Future 2025 activities in Rotterdam in September.

The fifth edition of Alud!, organised in collaboration with Casa de Lava[16], moved to a rural setting in Riudoms, taking the form of an immersive training dedicated to expanded cinema. Participants lived alongside invited artists during intensive days of training and discussing the production and exhibition of immersive expanded cinema works. The invited guests were the American artist Katherine Bauer, the French artist Étienne Caire, Laura Moreno Bueno, Andrea Sánchez Iañez, Tasio and the curators Almudena Escobar and Margarida Mendes. Also present were members of Crater-Lab, including Luis Macías, Antonio Bértolo and Yago Alcover, who gave training and participated in the expanded cinema programme.

The devices created during the project remained active until the end of the project. During the immersion, Crater--Lab members conducted new tests with the 360 camera. In the summer of 2025, Yago Alcover used the 360 camera during his SCREEN residency to make a new film and to prepare material for a performance about mining in the Basque Country.

The final SCREEN residency within Crater-Lab’s programme for SPECTRAL was designed to be realised in direct relation to the panoramic screen. It is a new immersive expanded cinema work conceived by and for the 360-degree panoramic format. The residency took place in Barcelona in the last quarter of 2025 in collaboration with La Negra Factory, a multidisciplinary creation space and independent studio for artists where Crater-Lab produced and presented this immersive piece.

Since 2024, the panoramic screen and the 360 Hyperlapse Camera have been part of the laboratory’s equipment. Available for projects in residence and for projects by members of the collective, they were designed to be easily assembled and transported as they are flexible and a modular equipment. For all these reasons, the production of immersive projects continues to be part of Crater--Lab’s fundamental mission.

Although the project and SPECTRAL are over after five unforgettable and intense years, the laboratory continues its research as an active member of the network of laboratories and experimental filmmakers, as well as supporting the DIY visual and audiovisual arts scene.

16 https://casadelava.org/.



SPECTRAL

VAL DEL OMAR

MOVIDROME

EL SEXTO SOL

GRAND FINALE

IS NOT THE SUN
WHO IS MOVING

TRAFFIC

ALUD! #2

360 SCREEN

HYPERLAPSE CAMERA

TORONTO TEST

ALUD! #3

ALUD! #4

ALUD! #5

RESIDENCIAS SCREEN

ALUD! #4 TEASER

# WORM Filmwerkplaats

# Rotterdam, the Netherlands

## INTRODUCTION

The massive shift to digital technology in the film industry has created an unprecedented situation, leaving the future of 16mm film and other small-gauge formats in the hands of artists. Due to its tactile and material nature, photochemical film remains an active and vibrant medium within artist communities, such as artist-run film labs, whose global network has seen an increase in the number of local film lab communities in recent years. Nevertheless, the ability to produce prints for 16mm film projection is quickly disappearing.

Contact printing is essential not only for producing photochemical prints, but also as a key method for artists exploring alternative structures and aesthetics in experimental filmmaking. However, original industrial contact printers are heavy and complex machines, most of which were manufactured in or before the 1980s. Consequently, accessing professional small-gauge film contact printing devices has become increasingly challenging for many new labs, as these machines are no longer produced and are difficult to find or maintain.

As an artist-run film lab and a partner of the SPECTRAL project, WORM Filmwerkplaats has invited artists and makers to develop various DIY solutions that can be used as an alternative to contact printers.

Over the course of the SPECTRAL project (2022-2025), three devices were developed: two types of contact printer and an alternative optical sound camera for recording variable-density soundtracks on film. This research aims to inspire filmmakers and artists worldwide to build their own contact printing devices and continue to contribute to the global network of artist-run film labs.

This text has been written by three makers as part of the SPECTRAL project. The author of each section is the maker who developed the corresponding device: Matthew McWilliams (desktop contact printer), Hrvoje Spudić (DIY sound camera system), and Nan Wang (SimplePrinter). Together, these contributions form a shared exploration of DIY contact printing solutions.

For more detailed documentation, please refer to the Filmlabs.org wiki.

**A.** **Matthew McWilliams**

## A DESKTOP CONTACT PRINTER

This research project aimed to create a desktop-scale contact printer to enable filmmakers to produce short prints in artist-run film labs and at home. Since this design should be easily reproducible, the hardware required to build it is all either 3D printable or consists of standardised parts that are generally available and affordable.

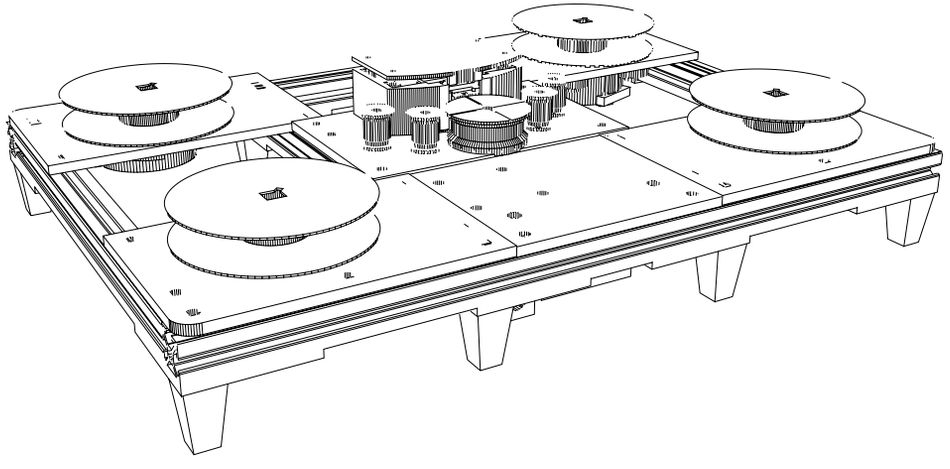

The result of the device research conducted at Filmwerkplaats for SPECTRAL is a small (40 cm x 26 cm) tool that can print up to 120 m of film at a time and can be modified to print longer lengths. All physical hardware design files are available for download as OpenSCAD scripts and all parts are available as 3D printable STL files. The project is being actively developed and the code to generate it is public and free to use.

https://sixteenmillimeter.com/projects/contact_printer



A significant development that made this printer possible was affordable SLA resin printing, which allows for a level of detail that is impossible to achieve with filament 3D printers. The sprocketed roller was generated using a parametric OpenSCAD module that can produce 16mm drive rollers with arbitrary frame counts. The example below shows an 8-frame roller next to the 18-frame roller used in this project. They were generated by the same script.

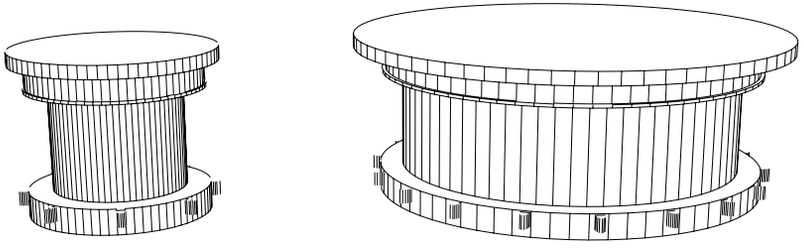

Due to a similar need for precision, resin 3D printing can be used to create small gates that would otherwise need to be machined.

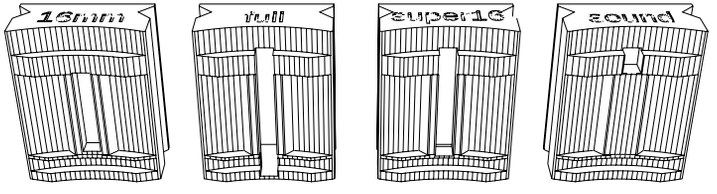


Initial tests using a much simpler gate design showed that modifications were needed to allow the gate to open as close as possible to the film path without obstructing it. The subtle curve on the front of the gates above allows the roller and sprockets to pass by, and this could only be achieved using the SLA resin printing process.

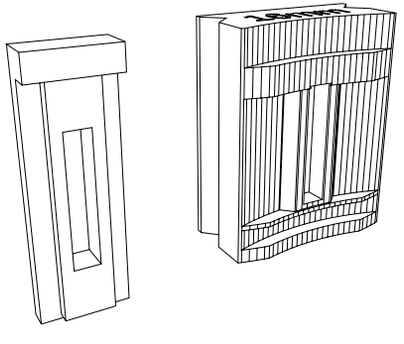

A secondary goal of this research was to foster a modular design philosophy working with common, reusable elements that could benefit other projects with similar needs. The sprocketed drive roller is one example. Another development from this design process was a take-up mechanism with a magnetic clutch.

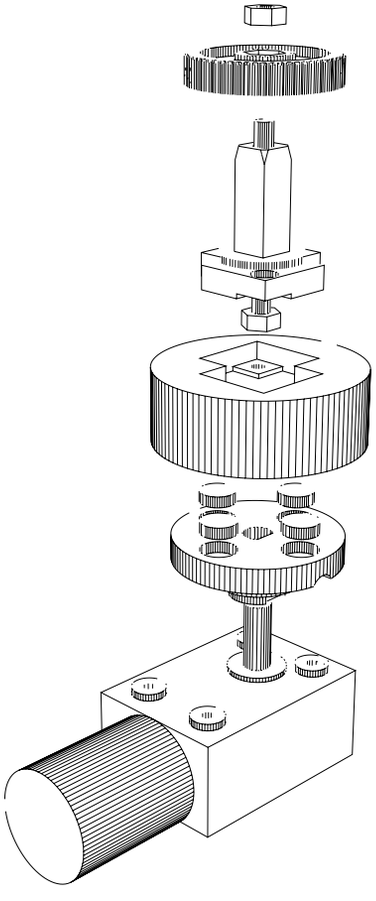

This was inspired by the Shaffer Linear Processor (https://clydeshaffer.com/slp/),which was created by Clyde Shaffer. Film take-up requires a more complicated mechanism than it appears at first glance. In a fixed-drive scenario, the speed of the take-up has to gradually reduce as the film is transported, because the reel slowly increases in diameter as it advances and winds more and more material. Accomplishing this with simple motors and motor controllers is difficult due to the limited range speed and the complexity that using only code adds to the design.

Clyde's solution is simple, inexpensive and elegant. By affixing magnets to one side of a clutch and a ferromagnetic plate to the other side, a drive motor can rotate continuously while the side of the clutch with the film attached slips. The result is a take-up mechanism that moves to the extent needed as the wrapping film increases in diameter.

This project resulted in a reusable module that takes an inexpensive DC worm gear motor and a configurable number of 6 mm neodymium magnets to tune the tension on the take-up. Since its development, it has already been incorporated into other projects, such as the take-up and feed mechanisms of an optical printer.
The lamp for the printer consists of six 5 mm white LEDs. This creates a constant, stable light source that can be filtered with gels and diffusion. Successful tests were performed on Kodak 3302 black-and-white print stock using a 216 diffusion gel and a 0.6 ND filter. Similar tests were performed on Kodak 3383 colour print stock using a variety of colour gels, and further work is needed to improve this process.

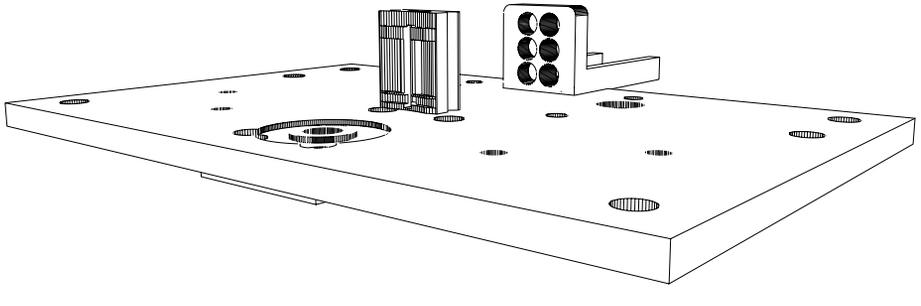



Thanks to the modular design of this contact printer, alternate panels and lamps can easily be swapped in and out while maintaining the rest of the transports and electronics.

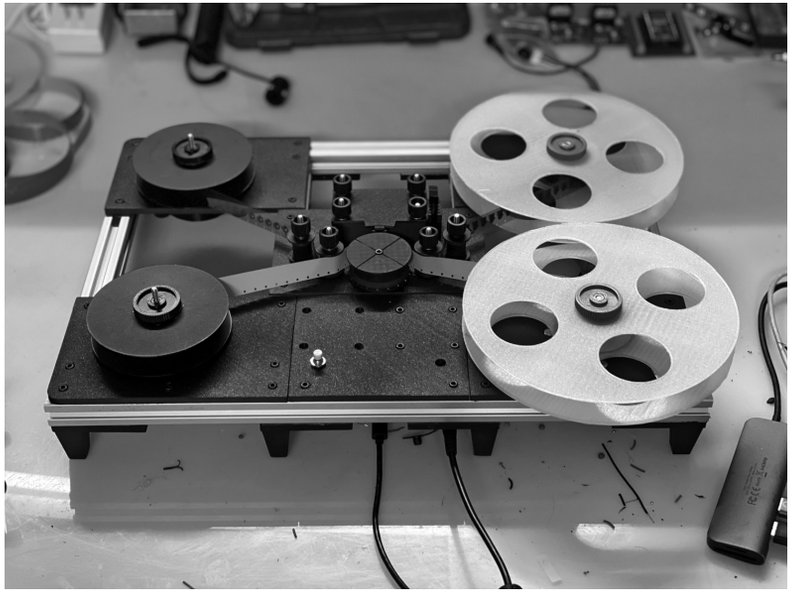

This is a print made using the desktop contact printer and a negative shot by Esther Urlus. The soundtrack was applied directly to the print stock by Hrvoje Spudić using his sound camera system.



**B.** **Hrvoje Spudić**

# DIY SOUND CAMERA SYSTEM

## Manual for modifying an Eiki projector for optical sound recording on 16mm Film

### Introduction

The DIY Sound Camera System enables small film labs and 16mm enthusiasts to produce optical sound prints in-house using widely available equipment—Eiki projectors—and an easy-to-make device. By adapting an Eiki projector with the Sound Camera System, it is transformed into a sound camera capable of recording variable-density optical soundtracks directly onto film.
The system relies on the projector's steady film transport mechanism and existing optical sound lens, paired with a simple circuit (an LM386-based audio amplifier) and an LED holder that can be fabricated in a makerspace-like setting (3D printing for the holder body and laser-cutting for the optical slit).

### Optical sound in standard 16mm projection

1. The exciter lamp's filament (A01) is projected through the sound lens (A02) as a narrow line of light.
2. The film's optical soundtrack (A03) passes through this line at a constant speed. Black areas on the soundtrack block the light; white areas allow it to pass through.
3. A photocell behind the sound drum (A04) receives the light and converts it into an electrical signal.
4. The amplifier boosts this signal to reproduce sound.
5. The frequency of the changes from black to white in the track corresponds to the frequency of the reproduced sound.

### DIY Sound Camera System principle of operation

1. Audio from a sound source is amplified using an LM386-based amplifier (C11).
2. A DC offset is added to the AC audio signal (C12).
3. This biased signal drives an LED (C03), modulating its brightness.
4. The frequency of LED modulation matches the frequency of the audio signal.
5. The LED light is focused through an optical slit (C05) and sound lens (C09) onto the film's soundtrack area.
6. This modulated line of light exposes the unprocessed film, encoding the sound.

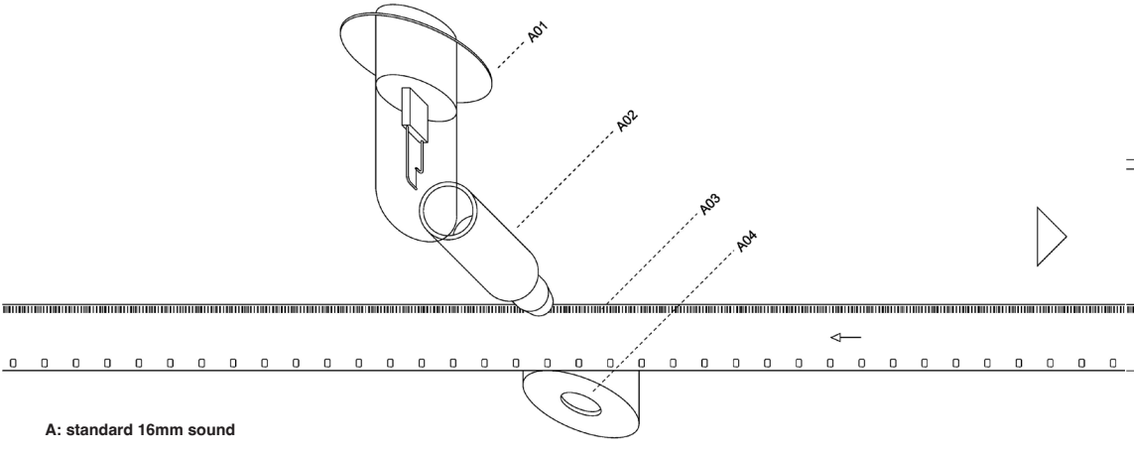


**A: standard 16mm sound**

**A01: exciter lamp**
**A02: sound lens**
**A03: soundtrack**
**A04: sound drum**



### Preparing the Eiki NT / SNT projector

1. Remove the pilot lamp (NT) or disable it (SNT, via fuse).
2. Optionally remove the projection lamp to avoid unwanted exposure.
3. Remove the exciter lamp (A01).
4. Fit the LED holder (B01) over the sound lens (A02) and align it to be perpendicular to the film.

### Order of operation: making a DIY sound print

1. Make a contact print of your picture negative onto print film.
2. Mark a frame 5 seconds (120 frames) before picture start.
3. Rewind the contact copy.
4. Load the contact print into the modified projector.
5. Advance the film until the mark aligns with the projector gate.
6. Start the projector and the sound source simultaneously, with a five-second silent lead-in on the audio.
7. Develop the film.

### Notes, observations and recommendations

- The system produces variable-density (VD) optical soundtracks.
- For best results, ensure proper exposure and development times to preserve the full tonal range (i.e., all shades of grey). The simplest way to control exposure is to insert neutral density (ND) filters between the LED and the optical slit.
- Variable-area (VA) soundtracks have high contrast (essentially black and white) and are easier to copy via contact printing. On the other hand, the fidelity of VD soundtracks depends on preserving tonal gradation, making them more difficult to duplicate.
- In VD soundtracks, volume is not determined by the LED's overall brightness but by contrast—the difference between the lightest and darkest parts of the developed soundtrack.
- Achieving precise synchronisation with the picture can be difficult, as Eiki projectors typically do not run at true sync speed (it can be slightly different from one unit to another). For best results, use a projector with a synchronous motor or a dedicated sync system (e.g., Richard Tuohy and Dianna Barrie's SyncSound Player).
- VD soundtracks are inherently noisy. Silence is recorded as 50% grey, which produces a hissing sound when reproduced.

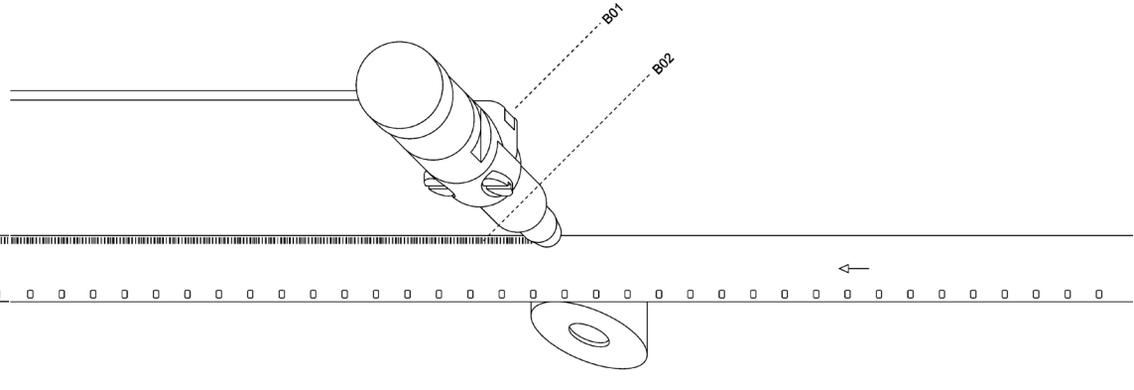


**B: modified projector**

**B01: LED holder**
**B02: exposed soundtrack**

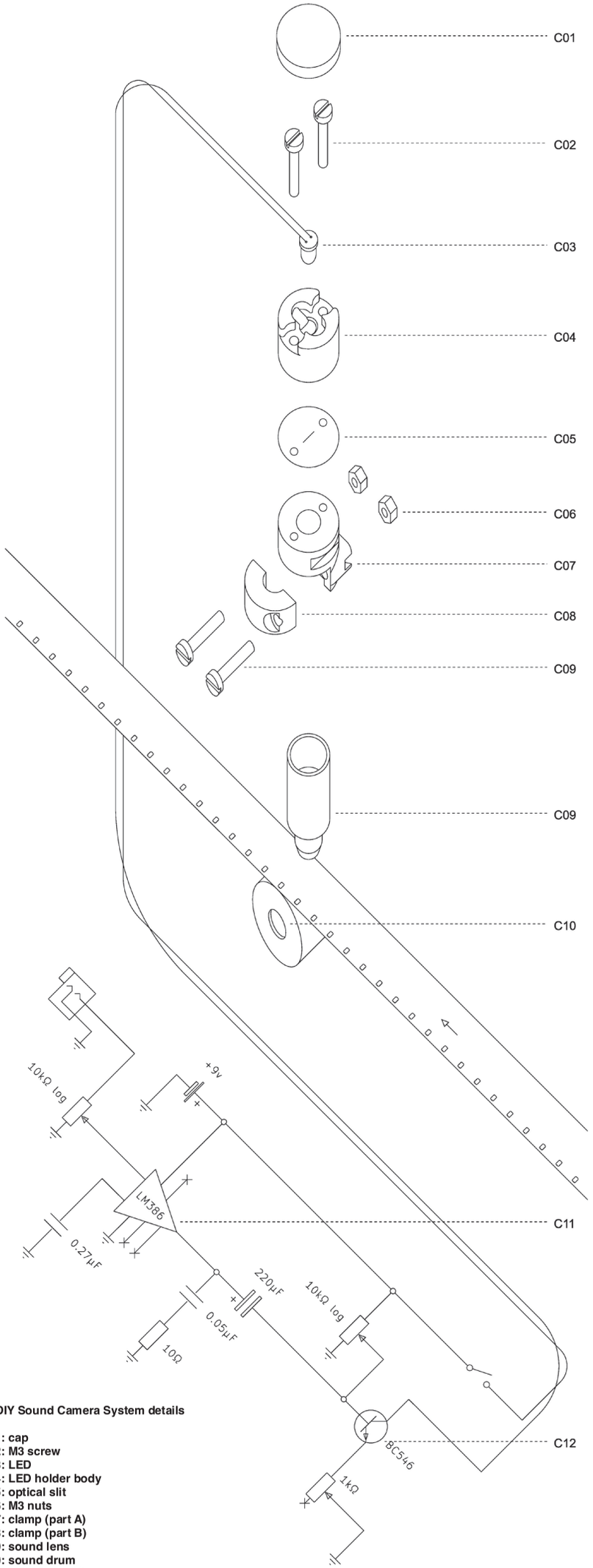




**C: DIY Sound Camera System details**

**C01: cap**
**C02: M3 screw**
**C03: LED**
**C04: LED holder body**
**C05: optical slit**
**C06: M3 nuts**
**C07: clamp (part A)**
**C08: clamp (part B)**
**C09: sound lens**
**C10: sound drum**
**C11: LM386 amplifier**
**C12: BC546 transistor**

**Sound Camera System tests**

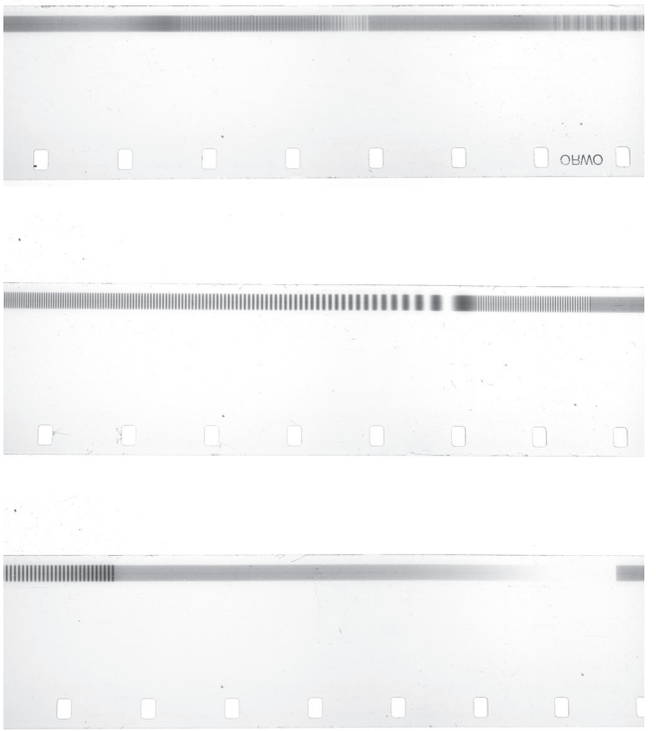

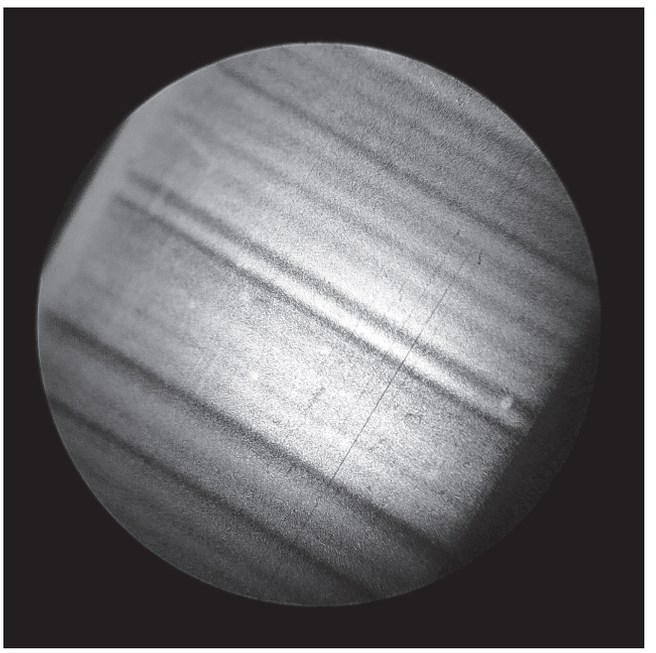

**Human voice recorded as a variable-density soundtrack on print stock, viewed under a microscope.**

**Microscopic image of 1 kHz and 10 kHz sound waveforms, recorded using the DIY Sound Camera System on Kodak 3378 sound negative film stock.**

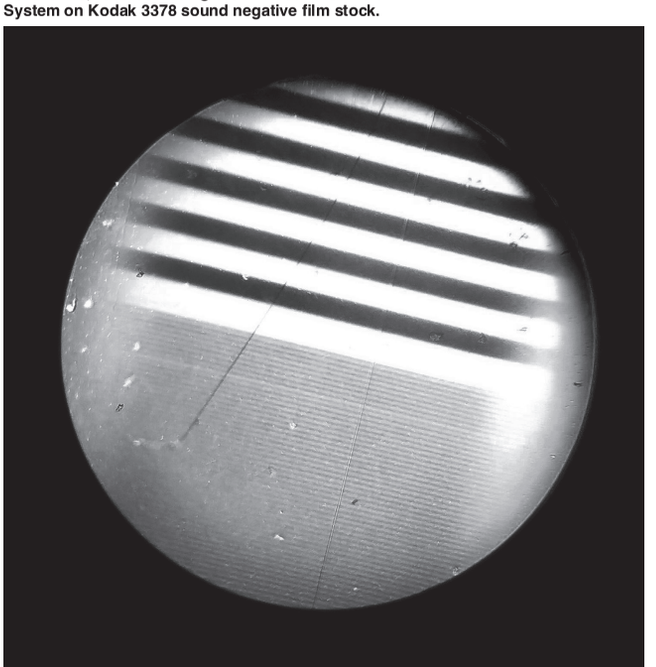

C.

## Nan Wang

### SIMPLEPRINTER

The research for this device focuses on building a version of a DIY 16mm contact printer that only uses simple materials and accessible modern components, making it affordable and within reach to artists and communities without access to professional equipment. By using laser-cutting fabrication techniques, these designs are simple and cost-effective to build. As they are provided with schematics and instructions, others can easily build their own versions or adapt the design to suit their needs.

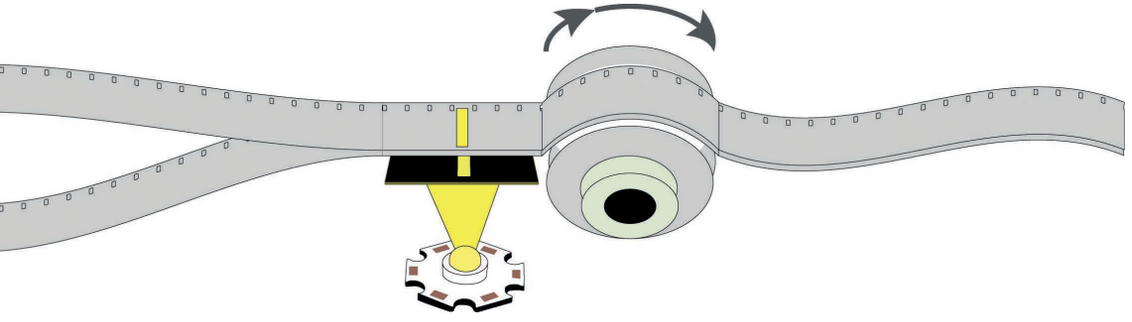

The basic idea of contact printing is that the emulsion side of the image negative touches the emulsion side of the unexposed film stock. When light is briefly shone through the negative onto the print stock, the image is transferred to it.

I have designed two finished versions of a DIY 16mm contact printer:
• SimplePrint Mini—a compact, portable version designed for smaller-scale projects;
• SimplePrint Extend—a larger version capable of handling longer film rolls.

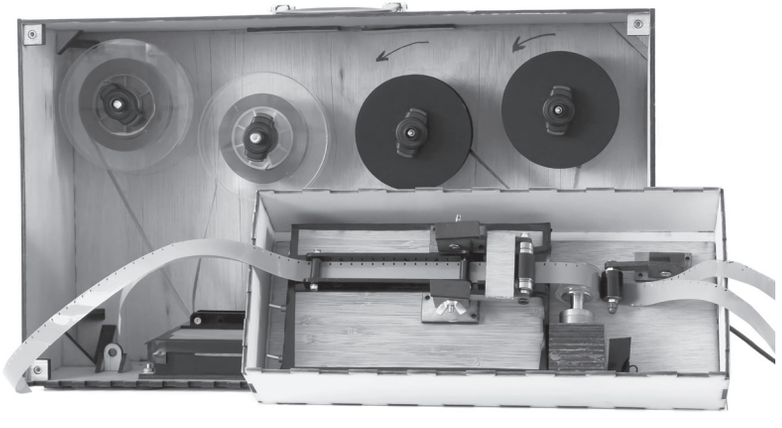



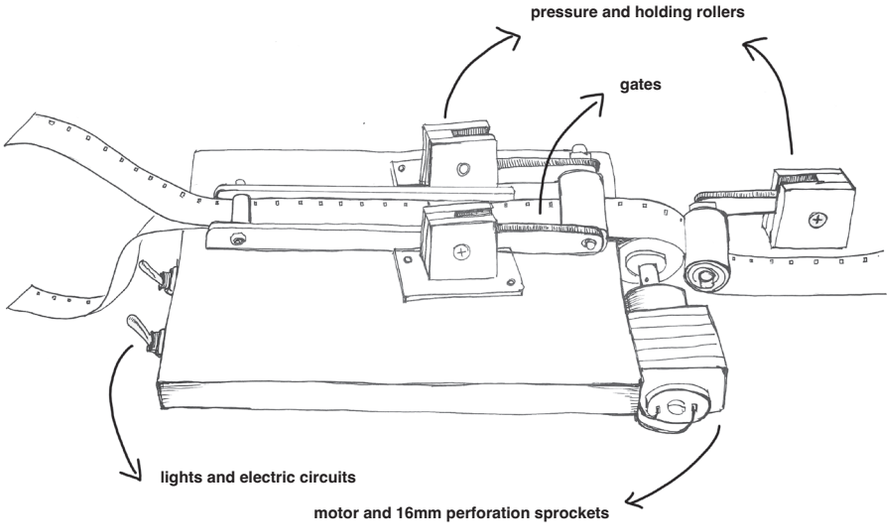


**I started with this basic principle and built the following components around it:**

- a light source to illuminate the negative during printing, and electric circuits;
- transport mechanics, including a motor and custom-designed 16mm perforation sprockets to ensure precise film movement;
- take-up mechanics, designed to collect the film while also stopping automatically when a certain tension is reached, preventing damage;
- gates, used to control the exposure area and separate image and sound tracks during printing.

**Exposure light source and electric circuits**

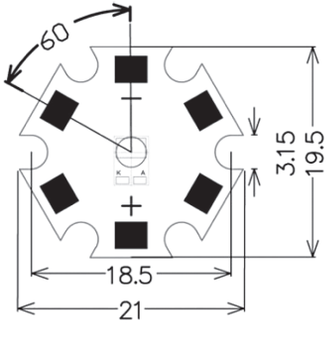


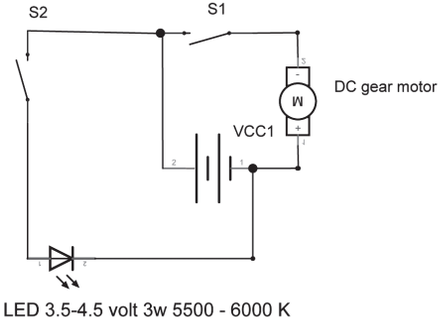


power LED 3.5-4.5 volt 3w 5500 - 6000 K

## Transport mechanics

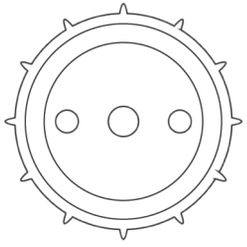

top view of all the layers

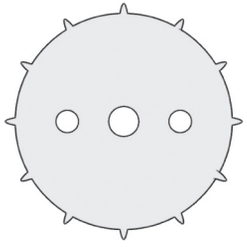

1 mm acrylic

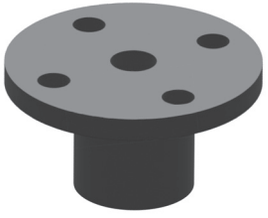

4 mm flange coupling connectors

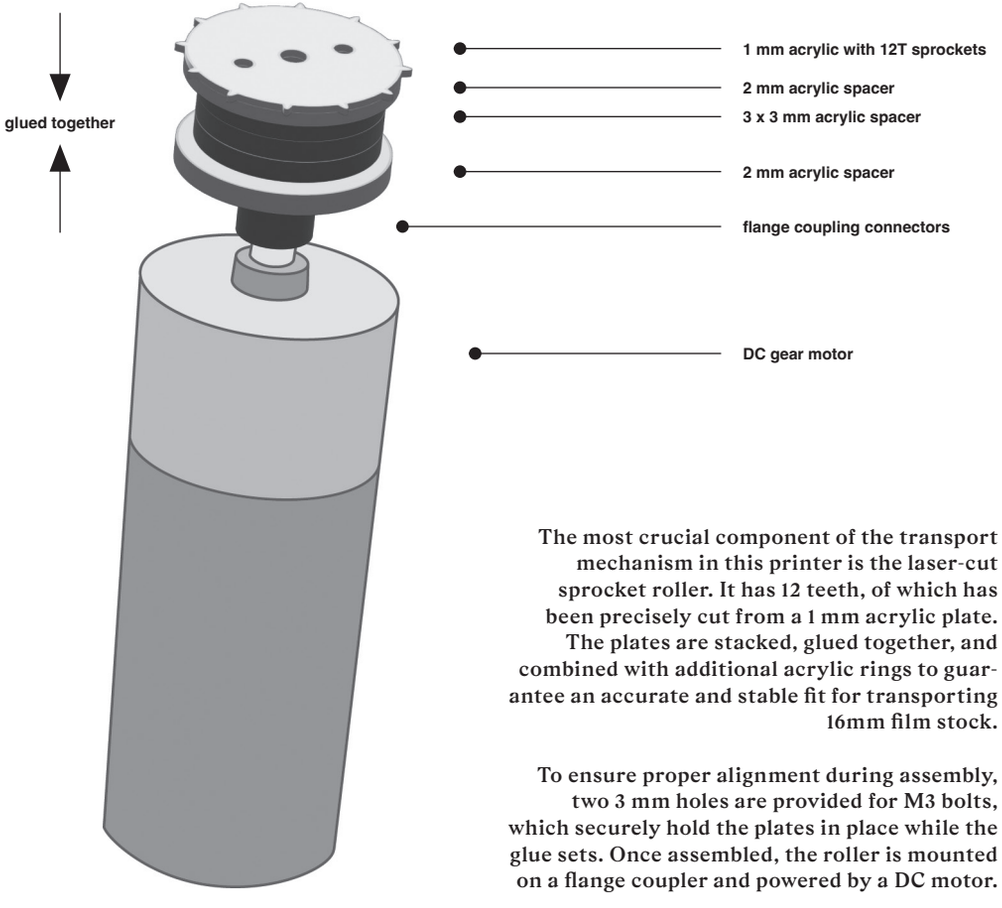


The most crucial component of the transport mechanism in this printer is the laser-cut sprocket roller. It has 12 teeth, of which has been precisely cut from a 1 mm acrylic plate. The plates are stacked, glued together, and combined with additional acrylic rings to guarantee an accurate and stable fit for transporting 16mm film stock.

To ensure proper alignment during assembly, two 3 mm holes are provided for M3 bolts, which securely hold the plates in place while the glue sets. Once assembled, the roller is mounted on a flange coupler and powered by a DC motor.



## Take-up mechanics

The SimplePrint Extend version of the printer is equipped with a take-up system that collects the negative and the print stock during the printing process. This system is powered by a continuously rotating DC motor.

To protect the film, the system is designed to slip if the film roll becomes too large.

The cap is connected to the metal ring using magnets, thus creating a magnetic coupling. This mechanism ensures that, when the tension exceeds a certain threshold, the take-up system stops pulling the film stock, thereby preventing damage to the material.

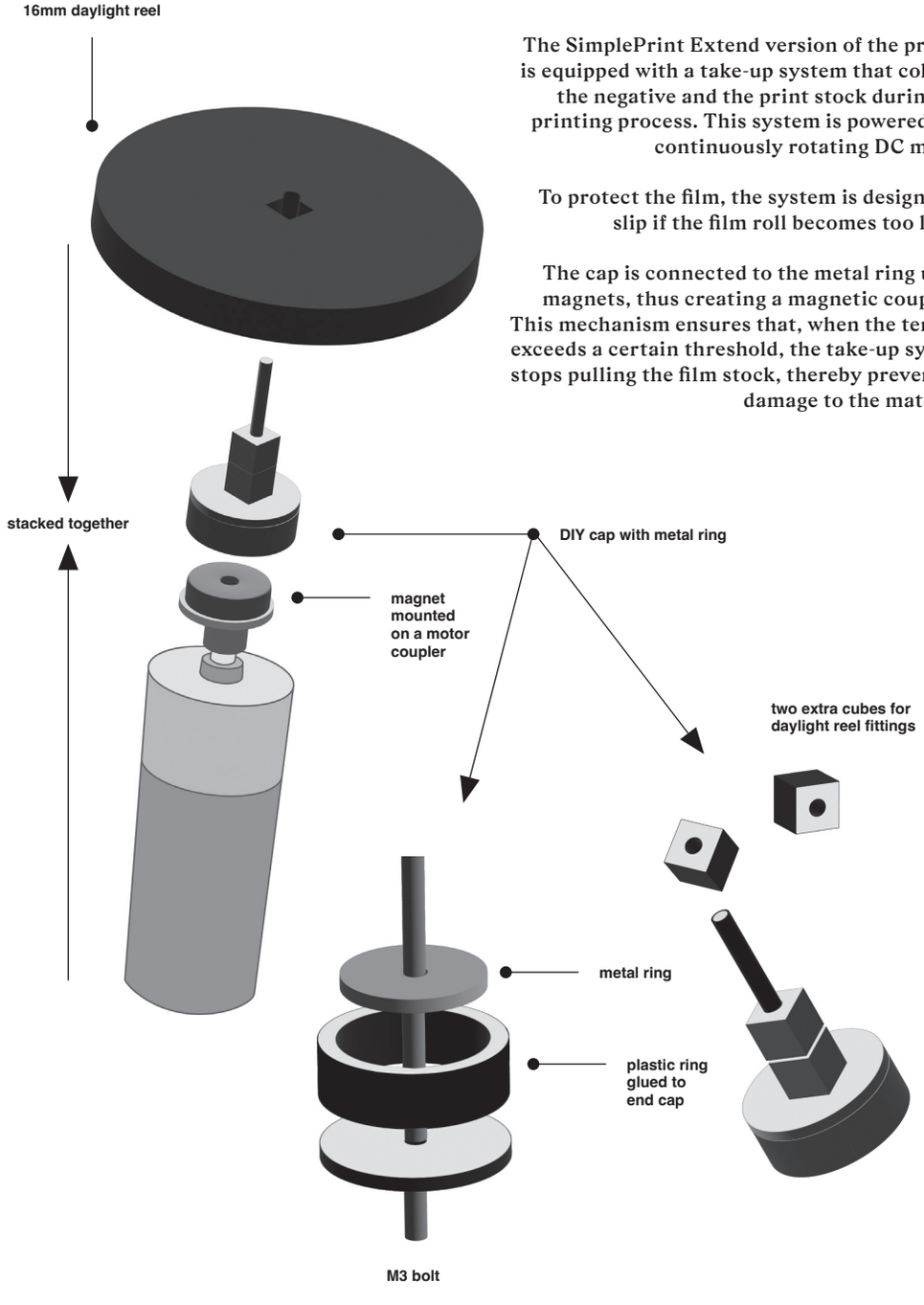

## Gates and printing test

The gate is designed as an acrylic plate that attaches to the printer.

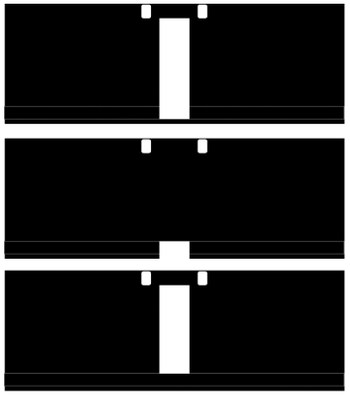

gate 1: Super 16mm
gate 2: soundtrack
gate 3: image



Printing test:
The image above was printed
combining gates 2 and 3

## Final printing test



Original negative



Print result on KODAK 3302



## Closing thoughts on the SimplePrinter

This DIY contact printer is not without its flaws. However, by sharing its design and schematics, I hope to inspire others to modify, improve, and create their own versions. Today, DIY fabrication methods, affordable motors, and microcontrollers enable artists and designers to reinvent analogue devices. By adapting these tools to contemporary needs, they can develop solutions that are better suited to creative practices, bypassing outdated standards inherited from the traditional film industry.

This hands-on approach opens up new possibilities for experimentation, innovation, and collaboration within artist-run film labs. By offering accessible alternatives like the SimplePrint Mini and SimplePrint Extend, this project aims to contribute to the ongoing development of analogue film practices.

## About the maker

Nan Wang is a multidisciplinary media artist and experimental filmmaker. Her artworks incorporate both new and old technologies in the form of interactive projection installations, optical devices, live audiovisual performances, and experimental films.

https://nanwang.org

LaborBerlin

# *The Space Is the Place*

Berlin, Germany

## INTRODUCTION

by Anja Dornieden, Juan David González Monroy

*Much of the discussion about space in cinema thus far has been concerned with the space inside the frame, and spatial theory regarding the images printed on the film. Today, however, when we think about space in cinema, we need to rethink the theory of space to include not only images, but also the field in which they are projected.*

**Iimura Takahiko**

*Brought to be initiated in some mystic chamber extraordinary in beauty and size, where he would see many sights and hear many such sounds, with lightness and dark appearing to him in alternation, and thousands of other things taking place.*

**Dio Chrysostom**[1]

*Yeah, space is the place.*

**Sun Ra**

In 2023, as part of the SPECTRAL project, LaborBerlin began a collaboration with the European Media Art Festival (EMAF) to create a series dedicated to re-staging historical works of expanded cinema under the title *Unburdened Recollections*. At first glance, this may not seem particularly exceptional, but it posed a number of challenges and paradoxes, with which we are still grappling and which we would like to share with anyone interested in exploring expanded cinema as an artistic tradition.[2]

1 Hugh Bowden, *Mystery Cults in the Ancient World* (London: Thames & Hudson, 2023), 250.

2 We must acknowledge that the term 'expanded cinema' itself presents its own problems when it comes to defining what it is, or more specifically, what it has become. Gene Youngblood provided one of the earliest and most well-known descriptions in his seminal 1970 work Expanded Cinema. However, Youngblood's version of expanded cinema was primarily concerned with the potential of new technologies and media to transcend the limits of traditional cinema and expand human consciousness. His ideas fall more comfortably under umbrella terms such as intermedia, mixed media, or new media.
As filmmakers, our path towards mind expansion followed a different trajectory—one traced through experimental and avant-garde cinema and its ties to analogue film. Having developed a practice centred on working with analogue film, and being involved in the world of artist-run film labs, expanded cinema was a natural outgrowth of our artistic engagement with photochemical processes. In other words, once one becomes preoccupied with making physical film prints, it's not a big step to start exploring the projection process itself and how manipulating it can become an artistic tool in its own right.
We encountered this kind of work early on in our analogue film practice. Although many of them were not explicitly labeled as expanded cinema, it was clear that they were connected by a sustained preoccupation with the fundamental aspects of analogue film, photomechanical projection, and the cinematic experience.

Perhaps the best way to explain the contradictions we encountered is to begin with the programme's subtitle: *Considering the Expanded Cinema Archive*. To our knowledge, there is currently no single archive dedicated specifically to expanded cinema. While it is possible to trace the history and lineage of the practice up to the present day, with a significant number of artists still producing work that falls under this category, there is no central repository for its historical and cultural memory as an artistic tradition. In other words, our starting point was a non-existent entity.

Of course, as a kind of younger sibling to capital-C Cinema, or a strange cousin within Modern Art, expanded cinema has carved out archival niches for itself within certain cinematheques and museums—institutions with, let's say, a more expanded view of the history of the moving image.

Nonetheless, we would argue that those who continue to work in the field of expanded cinema, or even those who have experienced it firsthand, would likely agree that the artefacts, documents, or recordings usually found in such institutions are not considered actual manifestations of the work itself. Documentation is what remains, the material that gives us some sense of the practice's history. However, it hardly offers a true understanding. At best, the current state of the expanded cinema archive could be described as a loosely assembled collection of scattered fragments bound together by a shared absence—puzzle pieces missing the picture on the box.

If what has been archived so far is not the thing itself, then what is missing? What is this absence? For anyone familiar with any form of live event, the answer should be obvious: what's missing is the experience. And this might lead to the obvious conclusion that one cannot archive an experience.

Works of expanded cinema are generally understood as performative events that take place in the presence of an audience. Other terms commonly used to describe them, such as *projection performance* and *live cinema*, emphasise this aspect. These are ephemeral acts that come alive in a specific space, for and with an audience. Clearly, a live event can be experienced, but not reproduced.

Case closed, then. Thinking further through the lens of expanded cinema, however, raises a number of issues that challenge the very concept of the film archive and its ability to serve as a true custodian of film culture. After all, every cinematic event is an experience. Analogue projection, which has long been the foundation of the cinematic event, requires a series of physical actions performed by the projectionist to bring the image to life on screen. For most of cinema's history, projection was itself a live act.

Given the inherent difficulty of archiving experience, traditional film archives have rarely attempted the task. As the quote from Iimura at the beginning of this text suggests, the main focus of film history (and likewise film preservation) has been the space within the frame. Cinema, however, has always had another equally, if not more, important dimension: the space of projection. This space is defined by physical parameters and social practices that shape the cinematic event as we recognise it today.[3]

The projection of light in a darkened room, shared by a group of spectators in silent wonder, forms the core of cinema as a social activity. From this perspective, cinema can be understood not just as a cultural artefact, but as a ritual—a practice with a well-defined set of actions and meanings.[4]

So, yes, perhaps experience cannot be reproduced with archival fidelity. But rituals *can* be reproduced. By definition, they are meant to be repeated, continually enacted in order to produce a specific outcome in an individual or group.

As Iimura demonstrates, if we understand expanded cinema as an art form that extends its exploration of the cinematic event into the space where images are projected, then we can begin to think of the expanded cinema artist not simply as someone who investigates the relationship between film and projection, but also as someone who activates a ritualistic space.

Seen through this lens, our prospective expanded cinema archivists need not burden themselves with the impossible task of preserving an ephemeral event. Instead, they should focus on the physical and conceptual conditions that made the ritual possible in order to reactivate the ritual space.

How to approach this became the central question of our investigation. The paradox of trying to preserve an unpreservable event offers its own paradoxical answer: even though the event cannot be authentically reproduced, the expanded cinema archivist must focus on researching and understanding the experience itself in order to identify the elements that made up the ritual. The constitutive elements of the ritual lie in the dynamic interplay between the artists, the audience and the space in which the experience unfolds. The goal is therefore to present or recreate as many of these elements as possible, in order to approximate the ritual experience, and hopefully its intended effect on the audience.

This brings us back to the title of the programme: *Unburdened Recollections*. The guiding principle behind the project was precisely the impulse to reenact the

This aligns with the work of Jonathan Walley, who identifies two strands or waves of expanded cinema in his book *Cinema Expanded*. The first wave, which emerged between 1964 and 1967, emphasised cinema's liberation from the materials that had traditionally defined it, as proposed by Gene Youngblood. The second wave, which began around 1968, was, as Walley writes, "the result of an expansion from within, a continuation of avant-garde film's tradition of theorizing cinema's ontology and distinguishing it from other art forms. Privileging the 'cinema' in expanded cinema, it was an outgrowth of the autocritical tendency that has defined avant-garde film throughout its history" (Walley, *Cinema Expanded*, 71). In this sense, our project focused on works that could be understood within the conceptual framework of this second wave.

3 In his book *Scratches and Glitches*, Jurij Meden posits, with a hint of irony, the idea of a 'church of cinema' arguing that any discussion of the future of cinema in the 21st century must take into account certain characteristics inherent in its conception during the 20th century: darkness, distance, silence, and scale. He refers to these spatial qualities as 'the altars of cinema' and acknowledges their religious connotations. However, his proposal is neither religious nor hierarchical. He explicitly calls them 'priestless altars', aiming instead to preserve these elements as constitutive of a collective space of meaning—a commons that enables us to jointly attend something larger than ourselves. Jurij Meden, *Scratches and Glitches* (Vienna: Österreichisches Filmmuseum, 2021), 78.

4 The ritual aspect becomes even more significant when one considers the cultural differences embedded in the act of showing and viewing films. There is no single, universal cinema. Wherever it has taken root as a cultural practice, it has developed its own version, complete with local customs and peculiarities. What one eats and smells in a cinema must be taken into account if one wishes to understand a place's film culture. The often overlooked senses of taste and smell can be considered equally important components of the cinematic experience, as we will see below in the work of Val del Omar, who pioneered an interest in integrating all the senses into his vision of cinema.

ritual without being constrained by the need to replicate the original event in every detail.

At the same time, we do not believe we have free rein to interpret the works however we like, whether for conceptual or technical reasons. Our starting point for each piece was the artist's original intention. Firstly, this meant that we would only present works with the full authorisation of the artist or their estate.[5] Secondly, we recognised that valuable research had already been conducted on many historical works, and that this research could provide the foundation for a respectful and informed presentation that honours the artist's vision.

We collaborated with a researcher/curator for each of the pieces presented. They proposed the work, shared their expertise, and helped us gather the necessary elements—film prints, loops, slides, sound recordings, sketches, instructions—to reenact the work.[6]

When we began the project, we naively believed that reenacting historical works would be a relatively straightforward process: a matter of combining existing research with original elements to create faithful facsimiles. Of course, that was not the case. For each work, we had to decide how to present what was available, and, more crucially, what to add or omit. In the end, we had to make many more creative choices than we had initially anticipated.

As suggested by the subtitle of the programme, our act of *consideration* is also an *invitation*. We do not claim to hold all the answers to how these works should be archived. As part of the programme, we hosted panel discussions with researchers, archivists, and some of the artists themselves, in order to initiate a conversation about the possibilities and challenges inherent of this archival process. The goal was to begin outlining a methodology for archiving expanded cinema. These events were simply a starting point, and we hope the conversation will continue beyond the scope of this project.

From this perspective, we would like to present three case studies of works that have been reenacted. These are intended for anyone interested in exploring a living archive for expanded cinema—one that goes beyond documentation, and can be experienced in terms of both time and space.

The three cases are: *Desbordamiento apanorámico de la imagen* by José Val del Omar, on which we collaborated with Esperanza Collado; *Horror Film 1* by Malcolm Le Grice, on which we collaborated with Cinzia Nistico, Betija Zvejniece, and Teaching and Learning Cinema; and *Shelter 9999* by Takahiko Iimura and Alvin Lucier, on which we collaborated with Julian Ross and Collaborative Cataloging Japan. These reenactments resulted in three essays, including our own contribution, "Approaching Desbordamiento apanorámico de la imagen," which reflects on Val del Omar's pioneering, yet still relatively unknown, techniques of expansion. Martin Moolhuijsen contributed the essay "A View from the Inside: *Shelter 9999* by Takahiko Iimura and Alvin Lucier". Luisa Greenfield's essay, "Handing Over Horror Film," gives thought to Malcolm Le Grice's iconic and enduring piece, *Horror Film 1*.


## Acknowledgements

We would like to express our sincere thanks to Katrin Mundt and the entire team of the European Media Art Festival; the curators Esperanza Collado, Federico Windhausen, Cinzia Nistico, Simona Monizza, and Julian Ross; as well as the artists and estates: Gonzalo Sáenz de Buruaga and Piluca Baquero of the Val del Omar archive, Claudio Caldini, Malcolm Le Grice, Babeth Mondini-Van-Loo, Betija Zvejniece, and the estates of Iimura Takahiko and Alvin Lucier. We are also grateful to all our partner institutions and collaborators, including Ann Adachi-Tasch of Collaborative Cataloging Japan, and Louise Curham and Lucas Ihlein of Teaching and Learning Cinema. Finally, we would like to thank Mark Paul Meyer and Céline Ruivo for moderating the *Unburdened Recollections* panels.


5 We're well aware that any kind of reenactment may go against the conceptual integrity of a piece as was expressed by the artist, and we would always respect those instances. Not everything can or should be preserved, and not every work fits within this idea of reenactment.

6 When selecting works for the project, our first concern was to consider the medium in relation to projection. Having witnessed underwhelming attempts to recreate expanded cinema works using digital projection—particularly in gallery settings, where images tend to be looped continuously in overly bright spaces—, we were determined to present the works in their original analogue format under suitable conditions. This meant screening them in a darkened space, with the appropriate sound, and respecting the temporal characteristics inherent in their event-based nature: each work has a beginning and an end, and these boundaries are clearly perceptible to the audience.

## APPROACHING *DESBORDAMIENTO APANORÁMICO DE LA IMAGEN*

by Anja Dornieden, Juan David González Monroy

*The cinema machine is merely an artefact, an instrument that can give and take life. Access to its cockpit should be socially permitted only to the true human poet, who, driven by an overwhelming love for others, will heroically set out to guide this new device, which is capable of allowing man, who is bound to a waterwheel every day, to catch a glimpse of the infinite.*

**José Val del Omar**[7]

For the first year of *Unburdened Recollections*, we decided to approach Esperanza Collado. We knew her as an established artist in the field of film performance, as well as a writer and researcher on expanded cinema—particularly practices referred to as paracinema, as they relate to the dematerialisation of film and the conceptual exploration of the idea of cinema.

Although our initial discussions focused on research she had been conducting on film performance practices in Taiwan, she eventually shifted our attention to the work of José Val del Omar (1904–1982), as it became clear that there was insufficient documentation on the Taiwanese practices available and that much more research would be needed.

We were genuinely surprised to discover the full scope of Val del Omar's visionary cinematic experiments. Although we were familiar with his ground-breaking films created in isolation under Franco's regime, we had no idea he had been conducting pioneering expanded cinema experiments as early as the 1950s—well before the term itself existed.

Born in Granada in 1904, Val del Omar was not only a filmmaker, but also a poet, philosopher, inventor, and mystic—he referred to himself as a *cinemista* (cinemist). He envisioned a radical confluence of technology and mysticism, which he termed *meca-mística* (mecha-mysticism): a force capable of producing an unforeseen form of cinema with the power to "penetrate the senses of passive audiences living in a world of machines that stain our brains." This concept was part of a larger project aimed at reaching the audience's senses through various physical and sensory means to produce a transcendental collective experience of immersion. As Val del Omar wrote, *"This great electronic mecha-mysticism must yield a fruit of closeness and understanding, of human interpenetration"*.[8]

Working largely alone and in relative isolation, he developed and applied several technical inventions to realise his *meca-mystical* vision. The most notable of these were *desbordamiento apanorámico de la imagen* (apanoramic overflow of the image), *visión táctil* (tactile vision), and *sonido diafónico* (diaphonic sound). He explored these innovations in his major body of work: three short films collectively titled *Tríptico elemental de España* (Elementary Triptych of Spain), comprising *Aguaespejo granadino* (1953–1955), *Fuego en Castilla* (1958–1960), and *Acariño galaico* (1961/1981–1982/1995), the latter of which was completed posthumously.

Our point of departure was Val del Omar's technique of *desbordamiento apanorámico de la imagen*. This projection technique involves overflowing the extra-foveal area of the retina—our peripheral vision—by projecting a secondary image around a central projection. The primary image appears on the conventional screen, while a secondary image four times larger is projected outwards, spilling across the architecture of the space, including ceiling, walls, and floor, and thus over the seating area and the spectators themselves, who become immersed in an expanded perceptual field.

This technique was first publicly tested during a screening of *Aguaespejo granadino* (1955), the first film of the *Tríptico elemental de España* trilogy, at the Berlin Film Festival in 1956. It was later used in the second film of the trilogy, *Fuego en Castilla. Tactilvisión del páramo del espanto*, which was presented at the Cannes Film Festival in 1961. There, it received the first technical prize ever awarded by the Cannes jury, in recognition of Val del Omar's inventions: the tactile vision lighting system and the apanoramic overflow technique. Despite this honour, Val del Omar expressed deep disappointment at receiving a technical rather than a main artistic award, as he believed that technique and content were inseparably intertwined.[9]

Esperanza proposed that we attempt to recreate a version of this technique in conjunction with *Fuego en Castilla*, the last known example of its use, and a film in which Val del Omar had implemented many of the tactile vision techniques he had developed up to that point. He described it as a "somnambulist essay of tactile vision."

The goal then became to gather detailed information about the piece, including how it had originally been conceived and presented. We knew of a recent exhibition at the Reina Sofía in Madrid that had attempted to recreate the *desbordamiento* technique using video projection in a gallery setting. The original had been presented on 35mm film in a cinema, and based on her research, Esperanza believed that this recreation was highly inadequate. Aside from the use of video instead of celluloid, the main issue was the misconception that the technique involved a constant double projection. In the exhibition, they simply used two digital projectors with different lenses and masking to overlay *Fuego en Castilla* on itself. This looping

7 Eugeni Bonet, Amar: Arder. Candentes cenizas de José Val del Omar, accessed at www.valdelomar.com. Originally published in French in *Trafic*, no. 34 (Summer 2000). Our translation from the Spanish.

8 José Val del Omar, "Mecamística del cine", in *Val del Omar, más allá de la órbita terrestre*, ed. Elena Duque (Buenos Aires: Ministerio de Cultura del Gobierno de la Ciudad de Buenos Aires, 2015), 73. Our translation from the Spanish.

9 *Fuego en Castilla* was submitted as Spain's official selection to the festival, alongside Luis Buñuel's *Viridiana* (1961), which ultimately won the Palme d'Or, but was subsequently banned in Spain for seventeen years. Laura Jaramillo, Devo(ra)tional Cinema: Spectacle, Ritual, and the Senses in Cold War Latin American and Spanish Experimental Film (PhD diss., Duke University, 2019), 68–69.

projection, situated in a gallery, bore little resemblance to what Val del Omar had presented or intended.

It was our intention to bridge the gap to his original conception and create a celluloid version that would be closer to the original that Esperanza proposed to the Val del Omar archive. Sadly, no visual documentation of its presentation at the Cannes Film Festival has survived.

Our only other resource was Gonzalo Sáenz Buruaga, Val del Omar's son-in-law and occasional assistant. He had been present at both the Berlin and Cannes screenings, and to our knowledge, he was the only living witness to have seen the technique in action.

From Gonzalo's conversations with Esperanza, we learned that the overflowing projection technique was not used throughout the entire film, but rather employed sporadically to create emphatic moments. It mainly consisted of projecting lapping flames onto the theatre's floor, ceiling, and walls, engulfing the audience. According to Gonzalo, Val del Omar himself activated these images using an anamorphic lens. This image of Val del Omar intervening live during the screening reinforced for us the performative nature of the work and its pioneering role in the field of expanded cinema.

A separate account of the screening includes further testimony from Sáenz Buruaga, who "recalled that people were so afraid of the flames climbing the ceilings and walls of the screening room that they frantically clutched the film program and fanned themselves with it in fear."[10]

Fortunately, Val del Omar left behind a substantial body of writing in which he described his inventions and *meca-mystical* ideas. One text in particular would become foundational to our understanding of the technique. In 1957, he presented a document titled *Desbordamiento apanorámico de la imagen* at the International Congress on Cinematographic Technology in Turin. In it, he proposed a technique that could be applied to a variety of films and installed in conventional commercial cinemas.

However, the technical process described in the text does not fully align with Gonzalo's testimony, as it implies the use of technologies that did not yet exist at the time.[11] It became clear that Val del Omar used more rudimentary methods for his own performance, while envisioning a future where cinematic technology would evolve to realise his ideas more fully.

Nevertheless, the document is invaluable for understanding his intentions with the work and his aim of activating passive audiences through sensory immersion. This was crucial for us. Once it became clear that a faithful recreation of the 1961 presentation was not possible, we instead set out to create an approximate version of Val del Omar's *meca-mystical* intention, which might still engage the audience in the way he had envisioned.

A specific section of the text served as a guide for this goal of sensory activation. Rather than a mere visual intervention in a film, Val del Omar proposed a complete transformation of the cinematic space and the bodies within it.

*As far-fetched as they may seem, I have no objection to listing a few possible devices for conventional theatres to increase audience participation—an idea with which everyone agrees.*

*1. Greater darkness and greater illumination of the theatre during film screenings, achieved through a synchronised pulsating lighting design that is programmed to participate actively during the projection.*

*2. The presence of an inducing scent, specific to the cinematic theme being shown.*

*3. A unique flavour for each film, served as an aperitif. (The promotional department will be responsible for delivering the scent and flavour effects.)*

*4. A complement to the new tactile vision, produced by pulsating tactile lighting and consisting of a programme of pulsating effects with individual regulation at each seat.*

*5. Diaphonic sound, which is conceived as an encounter, a collision, and a reaction between the spectator and the spectacle. It is produced by two sound sources placed in opposition, one behind the screen and the other at the back of the theater.*

*6. And finally, the Desbordamiento apanorámico de la imagen (...).*[12]

Keeping this in mind, we decided to treat his document as a kind of recipe for our own interpretation. We started with the overflowing technique, using as our central projection the archival 35mm archival print of *Fuego en Castilla*, generously provided by the Val del Omar archive, as our primary projection. Knowing that he did not use a second copy of the film to create the "extra-foveal" projection, we decided to use 35mm slides to generate the secondary image layer. Following testimony that these projections primarily featured flames, we created black and white slides of fire, sourced from individual shots in the film that featured flame imagery. We also included slides of smoke, sourced from footage that Esperanza had previously filmed.

We used four slide projectors—two at the front and two at the back—to create an image roughly four times the size of the central projection. We used black construction paper as a masking device in front of the slide projectors to keep the central image free from overlap, thus maintaining one of the core principles of the technique. Although slide projectors are typically designed for still images, we added motorised shutters to produce a flickering effect that complemented the concept of *tactile vision*.

Val del Omar conceived *tactile vision* as a new approach to film lighting in which light sources would flicker and pulsate in rhythmic patterns, transforming each beam into something akin to a fingertip gently exploring the surfaces it touched. In the film, this technique was used to illuminate the sculptures, carvings, and altarpieces housed in the Museum of Religious Sculpture in Valladolid. In keeping with this concept, we created several

10 Ibid.

11 Such as printing both central and overflowing image on the same piece of film, with the space typically used to separate frames imprinted with the second image. This would also require a modified 35mm projector with a set of double lenses capable of projecting both images simultaneously.

12 José Val del Omar, "Desbordamiento apanorámico de la imagen", in *Val del Omar, más allá de la órbita terrestre*, ed. Elena Duque (Buenos Aires: Ministerio de Cultura del Gobierno de la Ciudad de Buenos Aires, 2015), 105. Our translation from the Spanish.

Fig.1 Cropped image from a document titled *Desbordamiento apanorámico de la imagen*. © José Val del Omar

Fig.2 Rehearsal of the reenactment *Desbordamiento apanorámico de la imagen*, April 2023, Berlin. © Laurence Favre

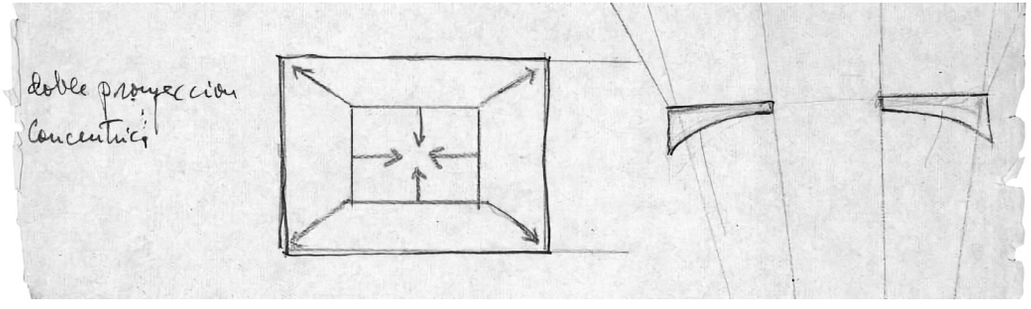






Fig.3 Still from *Fuego en Castilla*. © José Val del Omar

Fig.4 Reenactment of *Desbordamiento apanorámico de la imagen* at Scratch Expanded #11, June 2024, Paris. © Annette G. Parra | Light Cone



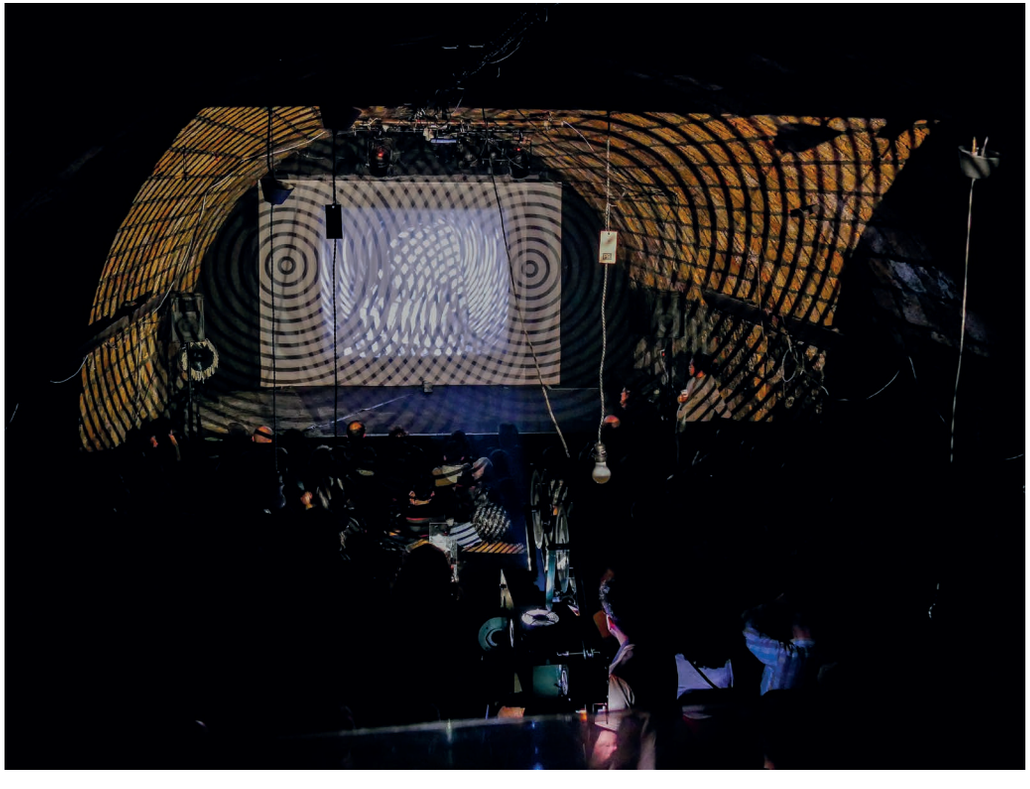

Fig.5 Bionic optic device in the exhibition *Cinema of Sensations: The Never-Ending Screen of Val del Omar* at Museum of Moving Image, March - October 2023, New York. © Thanassi Karageorgiou | MoMI

Fig.6 Serving aperitifs at Scratch Expanded #11, June 2024, Paris. © Annette G. Parra | Light Cone





slides that either replicated or echoed the abstract patterns Val del Omar had used as lighting masks in the film, extending those motifs beyond the edges of the screen and into the surrounding space.

To introduce more movement into the imagery, we decided to replicate another of Val del Omar's techniques. In the 1970s, he extensively experimented with slide projection and developed a system he termed *Óptica biónica energética ciclo-táctil* (Cyclo-Tactile Energetic Bionic Optics), which involved placing a slowly rotating anamorphic lens in front of the slide projector. When combined with rotating shutters, it created visual distortions that simulated a tactile relationship with the image, as though the eye were sensually caressing a three-dimensional object. Val del Omar's understanding of this system as an evolution of his tactile vision concept encouraged us to use slide projectors for our reinterpretation of the overflowing technique.

The soundtrack was comparatively easier to adapt, particularly when it came to recreating the diaphonic sound experience that Val del Omar envisioned. Conceived as a counter-response to the rise of stereophony in cinemas, this technique was described by Val del Omar as a form of "sonic superrealism" with heightened emotional impact. It employs dual soundtracks not to produce conventional stereo, but to create acoustic tension by directing contrasting sounds from both the front and rear of the theatre, thereby immersing the audience in a dynamic field of sonic collision.

The 35mm archival print included a stereo optical soundtrack with two slightly different channels. We reconfigured what would typically be presented as left and right audio as front and back channels, placing speakers at both ends of the room to approximate the original diaphonic experience.

In terms of other spatial and sensory interventions, we only implemented those that were feasible given our limited resources. Custom lighting effects at each seat, for example, were beyond our means. However, we did implement elements of scent and taste. We collaborated with scent artist Klara Ravat to create a series of aromas based on the elemental themes of the triptych: water, fire, and mud. For this piece, we chose to diffuse the scent of fire using fans and spray diffusers. In homage to Val del Omar's concept of the aperitif, we also set out to create a drink designed to draw the audience into the spirit of the film.

As we started thinking about what that drink could be, Esperanza's recent travels in Taiwan emerged as a surprising source of inspiration. The idea was based on an infusion of hibiscus flower, Chinese hawthorn and *umeboshi* (Japanese pickled plum) that she had tried there.

"I first tried this combination one summer evening in Taipei. I don't usually drink alcohol and, intrigued, I ordered this infusion from the menu. I was unsettled by its flavour: it was sour, deep, barely sweet, with a vibrant astringency that clung to the palate. I found it exquisite and radical, as if

instead of quenching thirst, it ignited it. I later omitted the honey included in the original version, to preserve its sharp, piercing quality.

The colour is garnet, like a cloudy wine. Its chromatic density seems to absorb light, much like the black backgrounds in *Fuego en Castilla* allow white matter–sculpture, plaster, bone–to explode before the camera.

When we started imagining the details of our interpretation of *Desbordamiento* a few months later, this flavour came to mind immediately. Not due to narrative analogy, but because of a sensory affinity: like Val del Omar's work, especially *Fuego en Castilla*, this drink seems to radiate heat from within, leaving a lingering sensation in the body, somewhere between the medicinal and the ceremonial. It shares that enveloping strangeness and a slow-burning heat that both awakens and unsettles."[13]

For the presentation, we decided to screen the film twice: first in its original form, and then applying the overflowing technique. This approach honoured the rarity of Val del Omar's work being projected in 35mm, giving the audience a chance to experience the film as he left it. During the necessary reel rewinding, we served the aperitif and released smoke into the space to enhance the visibility and materiality of the light beams—a gesture aligned with the notion of *tactile vision*.

All of these decisions shaped the first performance of the piece at EMAF in 2023. However, our first attempt at presenting the new version of the work was not entirely successful. Given that we wanted to project the original 35mm film and have it interact with slide projectors, we had to source a portable 35mm projector for the main exhibition hall at the Kunsthalle Osnabrück. We managed to find one available for rent, but this meant we had to operate the projector ourselves. It featured a modified lamphouse we were not familiar with. Although rehearsals went smoothly, the lamp failed during the live presentation, just after the first part, so we were only able to show the original version of *Fuego en Castilla*.

This experience highlighted the challenges involved in presenting this type of work on celluloid. The necessary equipment is becoming increasingly rare and prone to failure. Nevertheless, we built on what we learned. We subsequently presented the piece successfully on two further occasions, adapting each staging to the specific venue and deepening it with our growing understanding of Val del Omar's ideas.[14]

We consider ourselves students of his monumental body of work. Our interpretation of *Desbordamiento apanorámico de la imagen* is, by necessity, an open and evolving process—never a facsimile, but rather, through ongoing refinement, a continuous movement towards the cinema of experience that Val del Omar sought to share as an act of love and care for his contemporaries and future audiences. Fittingly, Val del Omar ended his films with the title card: "*Sin Fin*" (Without End).

Through this deep immersion in his technical and philosophical ideas, we could feel ourselves inching closer to the mystical space of communal interpenetration that Val del Omar envisioned. We developed our own embodied understanding of his words: "for this is not a time for withered lights, but for the fervours of a blind substance that lift us up and out of the pulse of this vital valley of differences towards serenity, that help us in the passage between the monocellular infrared and the ultraviolet in zero gravity."[15]

13 Here is Esperanza's recipe:
洛神花茶 (*Hibiscus Flower Tea*)
Recipe (for 1 liter of filtered water):
– 10 g hibiscus flowers
– 3 g *Crataegus pinnatifida* (Chinese hawthorn, 山楂)
– 1 *umeboshi* (Japanese pickled plum, 烏梅)
Simmer gently for 20–30 minutes. Once finished, strain and serve hot or cold. You can also lightly whisk it to create a delicate foam on the surface—an ephemeral film that, curiously, lingers for hours, like a dense mist that refuses to dissipate.

14 The piece was subsequently presented in Paris at Scratch Expanded #11 on June 15, 2024, and in Barcelona at Alud! Festival of Expanded Cinematic Arts #4 on October 26, 2024.

15 José Val del Omar, "Meca-mística (Idea filosófica motriz de mi técnica de transmisión emotiva de nuestra cultura)", in *Val del Omar, más allá de la órbita terrestre*, ed. Elena Duque (Buenos Aires: Ministerio de Cultura del Gobierno de la Ciudad de Buenos Aires, 2015), 72. Our translation from the Spanish.

## A VIEW FROM THE INSIDE: *SHELTER 9999*

**by Martin Moolhuijsen**

The reenactment of *Shelter 9999*, a collaboration between the Japanese experimental filmmaker Takahiko Iimura and the American experimental composer Alvin Lucier, took place at the 38th European Media Art Festival on April 25, 2025. It was made possible through a collaboration with Collaborative Cataloging Japan, an international non-profit organisation dedicated to preserving the legacy of Japanese experimental moving images produced from the 1950s to the 1980s. They supported us in the research of the existing materials and handled the communication with the estates of the two artists.

Iimura met Lucier in 1966 after having travelled to Boston as a Harvard University International Seminar fellow. Shortly after meeting, they initiated a collaboration titled *Shelter 9999*, a multi-projection live performance that was staged in various venues over several years. Struck by the prevalence of "Shelter" signs across New York, Iimura proposed to address this Cold War anxiety and sought to incorporate its frenetic energy into the performance.[16]

Our reenactment of *Shelter 9999* was based on different sources that were gathered by Collaborative Cataloging Japan. These included reviews from local newspapers, promotional postcards, flyers, programme notes, instructions written by Iimura himself and some photographs of one of the performances. As is often the case when one tries to reconstruct the history of an ephemeral work of art, the sources appeared at times contradictory, differing on fundamental aspects such as the number of projectors used or the number of screens or walls the films were projected on. As we will see later, this constituted an aspect of variability that was fundamental to Iimura and Lucier's understanding of their collaboration. However, the descriptions of the 'deafening'[17] sounds of Alvin Lucier's soundtrack and Iimura's "brilliant white lights [...] flashing off and on"[18] remained consistent across all reviews. With these two elements in mind, we set out to reenact on film, to our knowledge for the first time since the sixties, *Shelter 9999*.

From a material standpoint, our performance is characterised by a central projection that includes a 28-minute direct scratch animation and Iimura's characteristic circular flashes made with a hole puncher on black leader; two different film loops, one with hole punches and one with a countdown leader; a 9-minute film showing footage of a naked woman, scratches and a TV anchorman; 35mm colour slides of neon cityscapes, face-painted individuals and street signs; and the energetic and noisy multi-channel soundscape by Alvin Lucier, who employed tape loops and electronics to create a soundtrack described by the *New York Times* as 'scratching, tearing, shrieking'.[19]

Gathering the materials necessary for the performance has been one of the main challenges concerning this reenactment: unlike *Horror Film 1* by Malcolm LeGrice, and in a manner more akin to *Desbordamiento apanorámico de la imagen* by José Val del Omar, the reenactment of *Shelter 9999* involved a laborious process of reconstruction of almost the entirety of its materials. The central projection with direct scratch animation and hole punches, for example, was done directly on 16mm black leader, which means that no negative exists and that, for obvious conservationist and archival reasons, we could not use the original filmstrip. The same was true of the 16mm loops projected alongside the main central projection, as well as for the 35mm slides. As such, our initial task, even before deciding how to stage the performance, was to recreate all the necessary materials. We therefore made new 16mm prints of the main projection and of the loops at our laboratory in Berlin. These copies were made from high-quality digital scans which were provided by Collaborative Cataloging Japan, which had digitised the main projection and the slides, and the New York Public Library, which holds the Alvin Lucier papers archive that contained the loops, the 9-minute film and the tapes. Copies of the 35mm colour slides were commissioned to a commercial film laboratory.

Another important point concerning the challenges of such a reenactment is the current technological landscape. We are all aware that analogue film was hastily abandoned by the industry when digital video emerged. Few commercial labs resist and the worldwide network of artist-run film labs remains almost the last stronghold available for artists to work with the medium. Nevertheless, technology has always been changing, even when analogue film was the only option available. Throughout the 20th century, analogue projectors changed in terms of their functions and characteristics, improving over mechanical flaws and adding features. A slide projector from the 1960s, for example, is generally slower than one from the 1980s when moving from slide to slide. Should we go as far as getting the original equipment that was used for the performance? How important is the slide projector's longer moment of darkness to this specific performance? Would it suffice to simply project the material in its original format? In this case, analogue rather than digital. These might seem superficial questions at first glance, but in an art form that is so inextricably linked to the mechanical and technical functioning of the apparatus, they can easily become essential. Our main concern was projecting analogue materials. Throughout *Unburdened Recollections*, we quickly realised that the reenactment of an historical expanded cinema performance by artists who are no longer with us is always inevitably a process of partial reconstruction at the very least.

16 Julian Ross, "SPECTRAL. Unburdened Recollections: Considering the Expanded Cinema Archive", in *Witnessing Witnessing: 38th European Media Art Festival Catalogue* (Osnabrück: Experimentalfilm Workshop e.V., 2025), 95.

17 https://post.moma.org/gallery/shelter-9999-1967-68/.

18 Quote taken from a newspaper clipping of the *New York Times* review of *Shelter 9999*, published on August 13, 1968.

19 Julian Ross found the 28-minute print and the slides at Takahiko Iimura's home. The 9-minute film, the countdown loop, the hole punches loop and the tapes were located in the Alvin Lucier papers collection at the New York Public Library. Julian Ross, "Takahiko Iimura & Alvin Lucier: Shelter 9999", in *Witnessing Witnessing: 38th European Media Art Festival Catalogue* (Osnabrück: Experimentalfilm Workshop e.V., 2025), 100.

Fig.7 Review of the performance of *Shelter 9999* at the Electric Circus, published in the *New York Times* on August 13, 1968. Courtesy of Collaborative Cataloging Japan.
Fig.8 Still from the video documentation of *Shelter 9999* at EMAF, April 2025, Osnabrück.
Fig.9 Filters and gels used during the reenactment of *Shelter 9999* at EMAF, April 2025, Osnabrück © Kerstin Hehmann

**Noisy Crew Brings 100th-Century Life To Electric Circus**

By THEODORE STRONGIN

Passers-by on St. Marks Place between Second and Third Avenues last night were treated at least in part to "a study of underground living in the 100th century." Most of them didn't bat an eye, in true New York tradition.

The "study of, etc." is the subtitle of a work called "Shelter 9999" by Alvin Lucier and Takahiko Iimura which started indoors in the Electric Circus, the discothèque at St. Marks Place, which on Monday nights this summer has been the scene of a multimedia series of events called "The Electric Ear."

At its beginning, "9999" was inspired by bats, according to Mr. Lucier, who provided its music. With the tentlike interior of the Electric Circus dimly lit, four characters in dark glasses clicked quietly at each other, moving, Mr. Lucier had explained before the event started, only when the echo of their clicks came back to them in certain ways. "Sonar," he called it. This part of "9999" lasted about 20 minutes and was very quiet.

Then, abruptly, a scratching, tearing, shrieking multichannel tape was turned at top volume, while films and slides made by Mr. Iimura covered three sides of the hall and part of the ceiling. The slides were mostly excerpts from newspapers—a bridal picture, an obituary notice. The films were fast-moving squiggles. This phase lasted about 45 minutes, and for the last 15 minutes or so of it, brilliant white lights kept flashing off and on.

Then, Mr. Lucier and four colleagues, blowing on conch shells, gradually eased out of the hall and down to St. Marks Place, hooting at each other hauntingly. Mr. Lucier was last seen starting up Second Avenue, a half block from the hall, as the others went off in different directions, still hooting. It's an old African tribal custom, Mr. Lucier said.



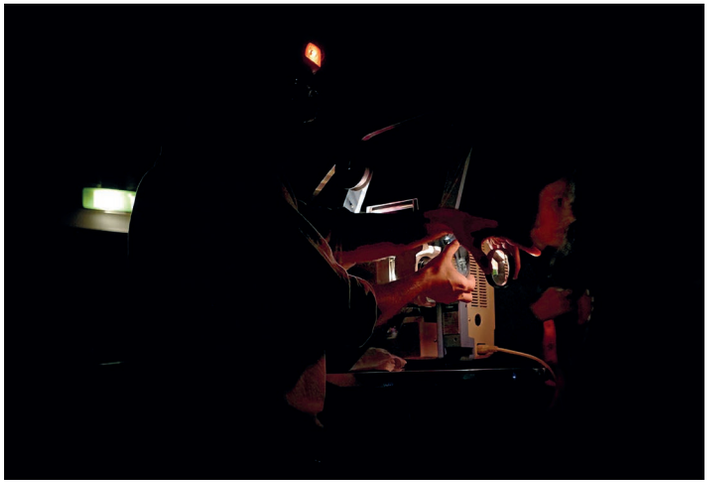



In the next paragraphs, I will revisit these considerations by providing concrete examples taken from our reenactment of *Shelter 9999*. In the case of Iimura and Lucier's work, written instructions were found by Julian Ross in a film can during a studio visit to Takahiko Iimura's home in 2012.

The instructions are divided into two parts: a list of the materials necessary for the performance and a bullet-points list of how to prepare the projectors before the projection. The first problem we encountered was that almost half of the text had been erased with a thick permanent marker, while multiple corrections had been added at another time in a red pen. These regard the number of 16mm projectors to be used and the number of elements that make up the performance. We could deduce that these instructions were initially intended for three distinct elements: a) one longer film loaded in a 16mm projector, b) two other projectors loaded with 16mm loops; and c) the slides. The corrections suggest a scaled-down version of the performance consisting of elements a) and c), the main film and the slides, which should be started simultaneously at the beginning of the performance, with the slides looping until the end of the 16mm projection. Seen in this light, the performance appeared quite straightforward, although some details were missing, such as the speed of the slide projector. A few questions, however, arose immediately. First, there was no mention of the soundtrack at all. Second, this presented us with a very important choice: which version of the performance should we reenact?

In his research, Julian Ross discovered that *Shelter 9999* was presented differently almost every time that it was performed. Iimura and Lucier did not think of their performance as being fixed, and sometimes they worked with other performers to create larger-scale versions of the piece. For instance, their respective partners Akiko Iimura and Mary Lucier participated in several performances and at least once as the four-person collective The Sparks. In another occasion, a review from the *New York Times* regarding a performance at the Electric Circus in 1968 indicates that *Shelter 9999* was performed by at least five different people. The absence of a fixed version of the performance partially freed us from having to strictly follow the instructions provided. Somehow we found ourselves in a similar position to the original artists, having to adapt the performance to different spaces with changing technological availability each time. Once we became aware of this fundamental variability, we started to consider reenacting multiple versions at once.[20] An additional factor that influenced our decision was Julian Ross's discovery of multiple versions of the soundtrack by Lucier: three stereo tracks lasting about 32 minutes, two of which had exactly the same duration, and a 19-minute mono track.

20 In *Witnessing Witnessing: 38th European Media Art Festival Catalogue* it is stated that *Shelter 9999* was reenacted twice consecutively. We initially thought of presenting the performance in a similar manner to *Desbordamiento apanorámico de la imagen*, that is to say two versions performed on consecutive days. The first version would have followed the instructions found in the film can, while the second would have been our reconstruction using multiple projectors with filters and gels. A few days before the performance, we discarded this idea and we decided to fuse the two versions together.

Since we knew that the soundtrack was presented in four channels at least once, we combined the stereo tracks with the same duration into a four-channel version, and we decided to incorporate both the stereo and the four-channel versions in the performance.[21]

At this point a brief excursus to discuss our approach to Lucier's soundtrack is necessary. *Unburdened Recollections* focused on reenacting historical expanded cinema performances in their original analogue formats. In all of our previous reenactments the soundtrack was either composed by the filmmakers themselves or physically present on the film. With *Shelter 9999*, however, we faced the challenge of working with the material of a prominent composer for the first time. The programme notes for a 1968 concert in Albany, NY, describe the piece as having live onstage modifications. However, the programme does not specify what these modifications were, and they remain unknown to us. For this reason, we decided to present the soundtrack as fixed media, focusing the majority of our efforts on the filmic aspect of the reenactment. We hope that the performance at EMAF will renew interest in *Shelter 9999* and encourage scholarly research into a piece by Lucier that has received less attention than some of his other compositions.

When it came to structuring the performance, we finally decided to combine the 'scaled-down' version described in the corrected instructions—that is, only the main projection and the slides—with an 'expanded' version inspired by the testimonies found in multiple reviews that included three more 16mm projectors loaded with the loops and the additional materials provided by the New York Public Library. Our aim was to create a spatial crescendo in terms of both image and soundtrack that would allow us to transition seamlessly between the two versions we had in mind. To achieve this, we transitioned from the stereo to the four-channel soundtrack while switching the projectors with the loops on. Since we knew from a programme note that during one of the performances the projections had been altered using lenses and coloured gels, we included these in the second half of the piece in order to physically expand the beams of the projectors even further. The lenses that we used linearly multiplied the images, creating traces of numerous coloured hole punches that allowed us to freely paint with light in the projection space.

Below is a series of instructions that we wrote after the performance at EMAF in order to visualise and remember our initial interpretation of this film performance. We do not consider them definitive nor exhaustive and we do not exclude that they could change in future re-stagings of *Shelter 9999*. This placed us in a similar position to Iimura, Lucier and their collaborators, having the possibility—or the necessity—to modify the performance according to technical and spatial requirements. In this sense we really were true to their spirit in acknowledging that the materials alone do not make the piece, and that *Shelter 9999* exists only when they are interpreted and brought back to life each time in a different manner as a live experience.

21 A review of the performance at the Electric Circus on August 12, 1968, states that the piece began with twenty minutes of clicks inspired by bats and produced using sonars. We did not include that part in our reenactment, but it is interesting to note that Alvin Lucier was working on *Vespers*, a composition for any number of players equipped with Sondols (SONar-DOLphins), in those years, and might have incorporated these echolocation devices in at least one of the performances of *Shelter 9999*.



### Instructions for *Shelter 9999* as of EMAF 2025

**Reenacted by Juan David González Monroy, Anja Dornieden, Martin Moolhuijsen and Julian Ross**

| | |
|---|---|
| **00:00** | Music starts abruptly (2-channel version, Martin) |
| **00:10** | Main projector starts (centre-right projector, Juan) |
| **04:00** | Slide projector on (Anja) - timer 20 seconds |
| **16:00** | Slide projector off (Anja) |
| | Music transitions to 4-channel version (Martin) |
| | 9-minute film on with a multiplying (x3) filter (centre-left projector, Anja) |
| **17:00** | Countdown loop (right projector, Juan) |
| **19:00** | Main projection off (centre-right projector, Martin) [when the scratched part of 9-minute film starts] |
| **24:30** | Main projection on (Martin) [~30 seconds after the anchorman first appears] |
| **25:00** | 9-minute film off (centre-left projector, Martin) |
| | Slide projector on (Anja) - timer 10 seconds |
| | Countdown loop (right projector) > hole punches on (Juan) with filters and gels |
| | Hole punches loop on (left projector, Anja) with filters and gels |
| **30:00** | Loops off (Anja + Juan) |
| | Slide projector off (Anja) |
| **32:00** | After credits main projection off (centre-right projector, Juan) |
| | Music fades out 4-channel version (Martin) |

## HANDING OVER
## *HORROR FILM*

**by Luisa Greenfield**

In a darkened room, the retina of the eye focuses on areas of light to make viewing possible. Composed of multiple photoreceptors that distinguish between day and night vision, the cones of the eye are particularly sensitive to the colours red, green and blue, which are known as the additive primaries of light. The variable difference of receptivity in each eye and mind means that every person will understand the shadow play of colours during a projection event in their own distinct way.

In a darkened room in Osnabrück, where people have gathered to see a restaging of Malcolm Le Grice's 1971 "film shadow performance"[22] *Horror Film 1*, rhythmic sounds of breathing and the steady clicking hum of three 16mm projectors fill the space. A woman in black pants and a close-fitting white shirt is standing in front of the light source, facing the screen close enough to touch it. Projectors positioned at the back of the room illuminate three separate film loops containing shifting bands of colour that cast a larger frame in the centre, while projectors on either side are angled so as to superimpose a frame within a frame, bathing the white screen and the female figure in alternating, overlapping gradations of colour. With her eyes fixed on the screen as if under a spell, her arms and hands hold slowly transitioning gestures that, in Le Grice's words, "delineate the screen size and shape at various points in the space between the screen and the three projectors,"[23] making reference to the parameters of the screen, its possibilities, and its limits. Over the course of twenty-four minutes, she takes a few measured steps backwards before pausing and changing gesture, steadily reducing the distance to the three projectors until her torso eventually blocks the centre projector lens and her hands move directly in front of the left and right lenses. The focus of attention gradually shifts from the figure to the colour dynamics of the silhouette and its mercurial shadows that in the end dominate the screen until, "by instinct of timing but relatively un-hurried," [24] the projectors are switched off giving way to applause.

Cinzia Nistico was invited to curate and help realise this iteration of *Horror Film 1* and she asked Betija Zvejniece to perform it. Both are film artists in their own right, and their careful attention to detail included direct conversations with Malcolm Le Grice, which resulted in a singular expanded cinema event, a restaging that even in its documentation resonates well beyond its limits. Perhaps this has something to do with the straightforward structure of a piece that, according to Le Grice, "attempted to make use only of the simple components readily visible within the projection event itself, working with simple loops of changing colour, direct-

22 https://www.malcolmlegrice.com/1970s.
23 Malcolm Le Grice, *Experimental Cinema in the Digital Age* (London: BFI Publishing, 2001), 319.
24 Malcolm Le Grice's *Horror Film 1* performance instructions from April 2022 in "'Moving beyond Malcolm' – annotations on Horror Film 1," (Teaching and Learning Cinema, April 2022), 6. https://bit.ly/3xlQ6mf.



Fig.10 Betija Zvejniece performing *Horror Film 1* at EMAF, April 2024, Osnabrück © Angela von Brill



Fig.11 Malcolm Le Grice, *Horror Film 1* sketch

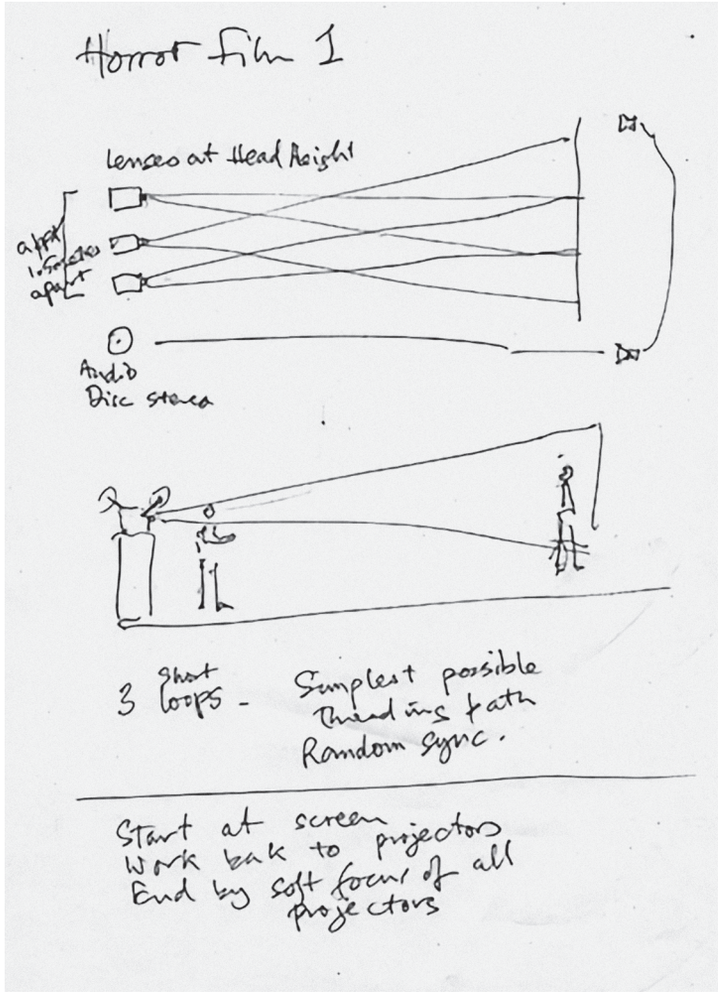




ly-cast shadows and moving projectors."[25] As well as the figure of the performer, a catalyst who activates the ritual through movement, gesture, and audible breathing throughout.

Le Grice had always performed the piece with a recorded loop of his own deep breathing, which invariably serves as a kind of score for the pacing of movements. In his indications for enacting the piece, he wrote, "The action begins touching the screen and—passing through the space of the audience—it ends at the projectors. The actions are timed to an audio tape of breathing. Though improvised in detail to fit the particular time and place, the action follows a consistent pattern that has changed little since the first performance."[26]

REMEMBER... THE PERFORMER IS ALWAYS FREE TO MODIFY, INVENT AND IMPROVISE WITHIN THE SHADOW PLAY PERFORMANCE.[27] Taking to heart Le Grice's recent performance instructions for *Horror Film 1*, with the last line emphasised in all caps, Betija Zvejniece has performed the piece three times to date, and each time she has tried a different method for amplifying the breath. The first performance was curated by Cinzia Nistico and took place at the WORM film lab in Rotterdam during the Back to the Future festival. During the performance, Cinzia breathed live into a microphone while Betija performed the movements. The second time, movement was performed by Betija who used a recording of her own breathing at Club Solo in Breda, Netherlands. The third performance took place at EMAF and they both opted to use a headset microphone so that Betija's breathing and actions could be more closely integrated into the piece as a whole. Cinzia pointed out that, "Malcolm liked the idea of reenactment because you make the work alive again. He said, 'If I would have had that [headset] technology in my own time, I would probably have used it.'"[28] Since there are no fixed gestures or choreography to the movements, the breath is a way to measure time in the piece and this method allows for a slippage in the synchrony of breath and movements. Cinzia observed, "When the performer is breathing live, there is nothing to restrain their movements, they can really focus on seeing the effect they are creating and not be distracted by some other structure imposed onto what they are doing on stage."[29]

Although in the early days Le Grice often performed *Horror Film 1* naked, he later said, "I fairly quickly came to the conclusion that there wasn't any particularly good reason to do it with no clothes on. [...] Certainly in the 60s and early 70s people couldn't wait to get their clothes off."[30] Cinzia and Betija agreed that it was not only unnecessary, but could also detract from the intention and materials of the piece.

Le Grice identified the duration of *Horror Film 1* as "14 min. (approx.),"

25 Malcolm Le Grice, "Material, Materiality, Materialism," in *Cinema News*, 1978.
26 https://www.malcolmlegrice.com/1970s.
27 Malcolm Le Grice's *Horror Film 1* performance instructions from April 2022 in "'Moving beyond Malcolm' – annotations on Horror Film 1," (Teaching and Learning Cinema, April 2022), 6. https://bit.ly/3xlQ6mf.
28 Transcribed from an online conversation with Cinzia Nistico, Betija Zvejniece and Luisa Greenfield on May 5, 2025.
29 Ibid.
30 Malcolm Le Grice in conversation with Louise Curham and Lucas Michael Ihlein, "Reaching Through to the Object: Reenacting Malcolm Le Grice's *Horror Film 1*," in *Performance Matters*, Vol. 1, No.1-2 Archiving Performance (2015), 32. https://performancematters-thejournal.com/index.php/pm/article/view/14.

Fig.12 Malcolm Le Grice with *Horror Film 1* colour loops, 2013 © Louise Curham and Lucas Ihlein
Fig.13 *Horror Film 1* colour loops, 2013 © Louise Curham and Lucas Ihlein



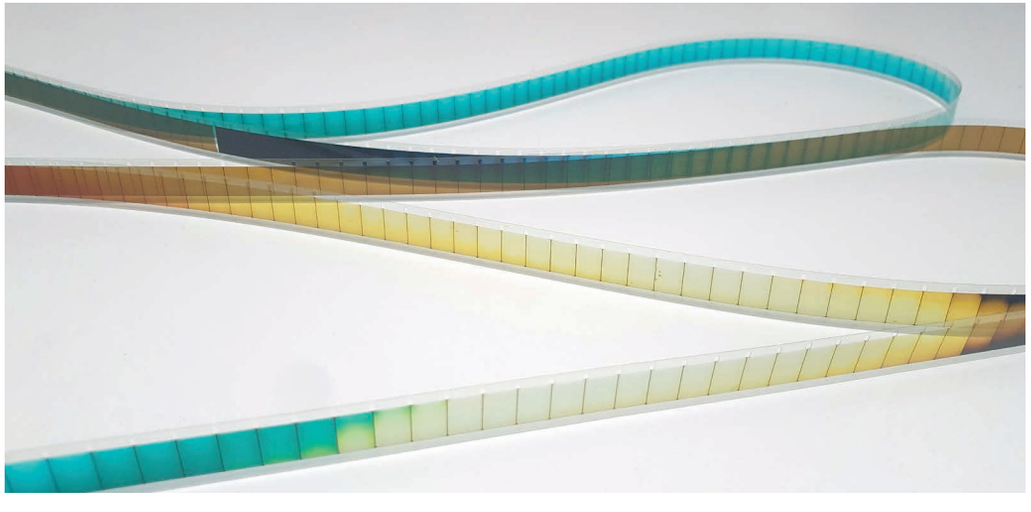



whereas the EMAF reenactment ran for twenty-four minutes. Betija indicated that "Malcolm Le Grice did everything himself in the pieces including turning on and off the projectors. In the first performance I didn't really connect with the sound. Breathing can give peace or a rhythm to the movements and that was what I was trying to do."[31] She indicated that it was easier to perform when the breathing was pre-recorded, because changes in the speed of her breathing were known and could be rehearsed, and her breath directed the movements. At EMAF, she needed to breathe through her mouth, amplified live throughout the performance, which was why the piece lasted longer. "At a certain point, I started to feel dizzy because it is very hard to breathe for twenty minutes loudly so that it is audible and so I started to do everything slower and that made it a bit longer. But the feeling was that the rhythm, gestures, and breathing are one thing."[32] The performer's body retracts towards the source of light in a sort of reverse zoom motion, blurring the silhouette while expanding the shadows cast on the screen, and relating the body's mechanism to that of the projector through movement and sound.

A person enacting *Horror Film 1* occupies a unique vantage point as both performer and observer, and together with the audience they become mesmerised by it. According to Betija, the act of walking backwards, of generating the image while watching it, and fixating on the flow of shadows in the shifting colour dynamics creates a hypnotic state. For the audience, it seemed as if she materialised from within the screen as she moved away from it. Cinzia commented that during the performance, "I lost the sense of time because it has this hypnotic effect. I really had a sense that she was coming out of the film itself. As if someone who was in the film is emerging from it."[33]

The title *Horror Film* comes from a series of film-performances Le Grice created between 1971 and 1972 that make passing reference to film genres (*Love Story 1*, *2* and *3*; and *Horror Film 1* and *2*). They are inextricably linked since, as Le Grice notes, "*Love Story 1* has only been performed once, was exploratory and improvised, the most successful elements being incorporated into *Horror Film 1*."[34] The three film loops with a changing spectrum colour used in *Horror Film 1* were cut directly from a print of *Love Story 1*, and these were also used for the EMAF restating.

However, Malcolm Le Grice was no purist. Regarding reenactment of his piece, he heartily encouraged its reworking: "My work is part of a public discourse really. I am not precious about it, if somebody wants to preserve it and work on it or be influenced by it or modify it, change it."[35] During the three screenings described here, red, blue, and yellow filters were taped over the projector's lenses to saturate the colours, since the print

31 Transcribed from an online conversation with Cinzia Nistico, Betija Zvejniece and Luisa Greenfield on May 5, 2025.
32 Ibid.
33 Ibid.
34 Malcom Le Grice, "Real TIME/SPACE," in *Art and Artists*, (December 1972). https://www.luxonline.org.uk/articles/real_time_space(1).html.
35 Malcolm Le Grice's *Horror Film 1* performance instructions from April 2022 in "'Moving beyond Malcolm' – annotations on Horror Film 1," (Teaching and Learning Cinema, April 2022), 4. https://bit.ly/3xlQ6mf.

copy extracted from *Love Story 1* was not in great condition. Cinzia elaborates: "I told Malcolm that we used the loops plus filters for the first performance, and he was totally fine with this. He said that when he was performing *Horror Film 1*, he was always carrying filters in his pockets so that, in case one of the loops would break, he could still carry on performing using filters. So it was in line with what he would have done."[36]

In the mid-1960s, although Malcolm Le Grice and other members of the London Filmmakers' Co-op were developing and printing their films in his garage "on equipment he built himself out of drainpipe and lumber,"[37] in that era he also learned how to programme computers. At the 2024 EMAF panel on historical reenactments in the *Unburdened Recollections* series, Malcolm Le Grice was asked whether digital and other technologies could replace 16mm film loops when reenacting *Horror Film 1*. He stated that he was a forerunner in exploring different technologies, well ahead of many other people working in film and video. Not at all concerned with authenticity, which he considered to be the domain of consumerist art markets, he said: "For me, the real concern is the experience of the spectator."[38] Regarding her work with *Horror Film 1*, Cinzia also pointed out: "He was not a purist. Even when we had problems with the loops, he said: 'Why don't you do it digitally?'"[39]

However, during the EMAF panel, film archivist Simona Monizza discussed the importance of maintaining the integrity of original materials when restaging a performance. "The film loops are part of an ecosystem of technological things that were happening at a certain time, and so you can read a lot of layers by having a film loop in your hands. How were colours produced? How were the labs working at that time? What film stocks were used and why? What kind of lamps were used in the projectors, and what kind of light were the people seeing? It's much more complex, not just a fetishism. These elements have information that can teach a lot about a moment in history, art history."[40]

For anyone interested in restaging *Horror Film 1*, research is immensely aided by the work of artists Louise Curham and Lucas Ihlein from Teaching and Learning Cinema. They have created detailed user manuals for the reenactment (or re-creating) of expanded cinema pieces from the 1960s and 1970s, including *Horror Film 1*.[41] Considering their work to be a form of custodianship, they make sense of selected historic pieces of expanded cinema through extensive material research, and importantly, by taking a genuinely sociable approach to forming deep connections with the artist. Learning about the piece also means performing the work themselves multiple times. They term the overall process of artists handing over historic pieces for others to reenact, "intergenerational transmission." Since 2013, they have been working with Malcolm Le Grice on *Horror Film 1*, spending extended periods of time in the British Film Institute archives and with Malcolm Le Grice at his home in Devon, UK, where he taught them how to perform the work. Together, they developed a detailed user manual to encode what they call the 'DNA' of a work, enabling it to be realised by future artists and evolve into the future. Even going so far in their preservation efforts as to transform *Horror Film 1* into literal DNA, packaged in a tiny metal capsule that is predicted to last 1000 years without loss or data corruption.[42]

36 Transcribed from an online conversation with Cinzia Nistico, Betija Zvejniece and Luisa Greenfield on May 5, 2025.
37 Pip Chodorov, "The Artist-Run Film Labs," in *Process Cinema: Handmade Film in the Digital Age*, Eds. Scott Mackenzie and Janine Marchessault (Montreal: McGill-Queen's University Press, 2019), 165.
38 SPECTRAL Unburdened Recollections Panel - EMAF 2024, https://www.youtube.com/watch?v=EcR57dq621c.
39 Transcribed from an online conversation with Cinzia Nistico, Betija Zvejniece and Luisa Greenfield on May 5, 2025.
40 SPECTRAL Unburdened Recollections Panel - EMAF 2024, https://www.youtube.com/watch?v=EcR57dq621c.
41 https://teachingandlearningcinema.org/expanded-cinema-re-enactments/horror-film-1/.
42 https://teachingandlearningcinema.org/expanded-cinema-re-enactments/mlghf1oatlc/.

# Mire



## Nantes, France

# *WANDERING, WONDERING*

**It sounds alike, especially from the perspective of a non-native speaker.**

**Cheminer, s'émerveiller**
**Déambuler, errer, parcourir***

* French lexical field inspired by the words 'wandering' and 'wondering'



**'Wandering' is a term used to describe cinematic practices based on itinerancy, where images and sounds bounce around in space, interacting with landscapes and people to generate delightful situations. The path that Mire has chosen to follow within SPECTRAL.**

**Others before us have taken similar paths since the origins of cinema, as well as in contemporary sister practices. Be it on foot, on wheels, with magic lanterns or 12V batteries, all these approaches inspired us.**

**2022—2025. Milestones along the journey: three phases of a creative research seminar to collectively imagine mobile sound and light projection devices; three artist residencies, invitations to explore these instruments.**

**Although we started on slippery grounds, made of desires and uncertainties, oh, what beautiful lands we have travelled through!**

**(Re)discovering a landscape in the light of the potential projection oases it offers, somewhere between natural and architectural elements, paying attention to its acoustic properties, surveying together, opening a passage, free and united by the arch of a starry sky.**

**To unfold the cinematic experience.**

**May others keep on outlining these trails.**

# *WANDERING SEMINARS*
# *Feb 2023–Jul 2023–Feb 2024*

*... and the benefits of bringing film communities together in the dark to share the primordial light ...*

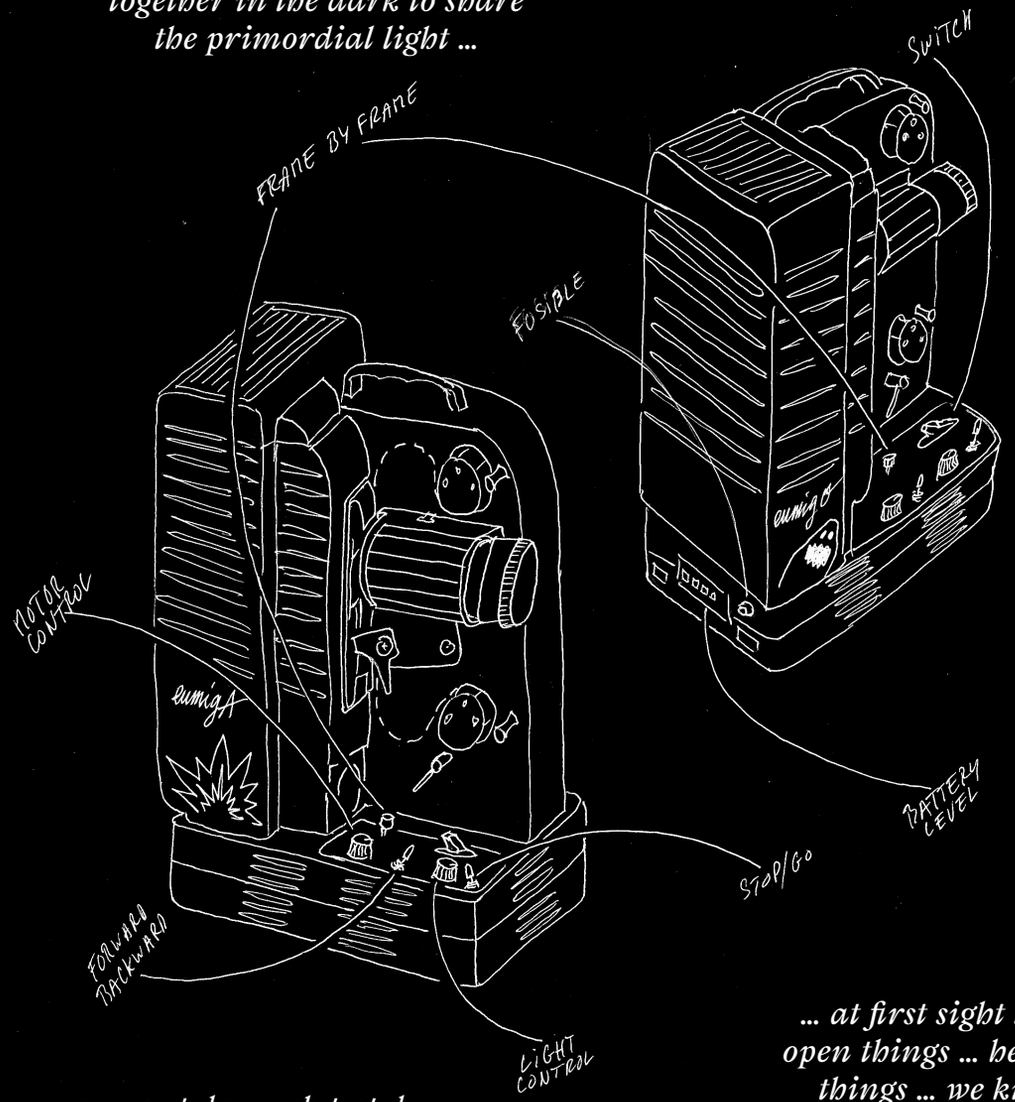


*... servant de crash test du cahier des charges de la ...*

*... at first sight ... he likes to open things ... he likes to open things ... we know how to open things ...*



**At first it was something of a leap in the dark. The least we can say is that we weren't going down a marked path.**

*... 'jugaad' (which loosely translates as 'DIY', but also has connotations of upcycling and using adaptive design) ...*

**An open call for artists, inventors and tinkerers, and an adventurous team is formed:**

**Lucie Bortot-Schneider (FR)**
**Antoine Capet (FR)**
**Estelle Chaigne (FR)**
**Maxime Führer (BE)**
**Marjorie Le Berre (FR)**
**Alex MacKenzie (CA)**
**Zach Poff (US)**
**Pierre Signolat aka ppp (FR)**
**Marc Simonart (FR)**
**Karan Talwar (IN)**
**Guillermo Tellechea UY, (D)**
**Loïc Verdillon (FR)**
**Stefan Voglsinger (AUT)**

*... J'aime pas les 0 et les 1. J'aime le bois et le métal ...*

*.... je deviens paysages (...) où tout est raconté par le son et les espaces qu'emprunte notre cheminement collectif ...*

*... the techniques we will acquire through this research will require us to investigate unfamiliar and long-forgotten strategies ... this feels risky ...*

*... d'observer en chemin ... cette installation d'images fondantes ...*

*... tout un tas de choses entamées qui prennent la poussière ...*

*... ou plus récemment mon flash à poudre de magnésium ...*



**Despite the obstacles encountered along the way, and thanks to an unfailing, long-term commitment,**

**demonstrating rare altruism,**

**the team stayed the course, and from this adventure were born:**

*Eishaki, Eumiga and Eumigo*

**3 modified, autonomous and portable 16mm projectors**

*Octoploc*

**a nomadic multi-channel sound system**

**a modular, multi-projection** *magic lantern*

**devices designed to benefit the community.**

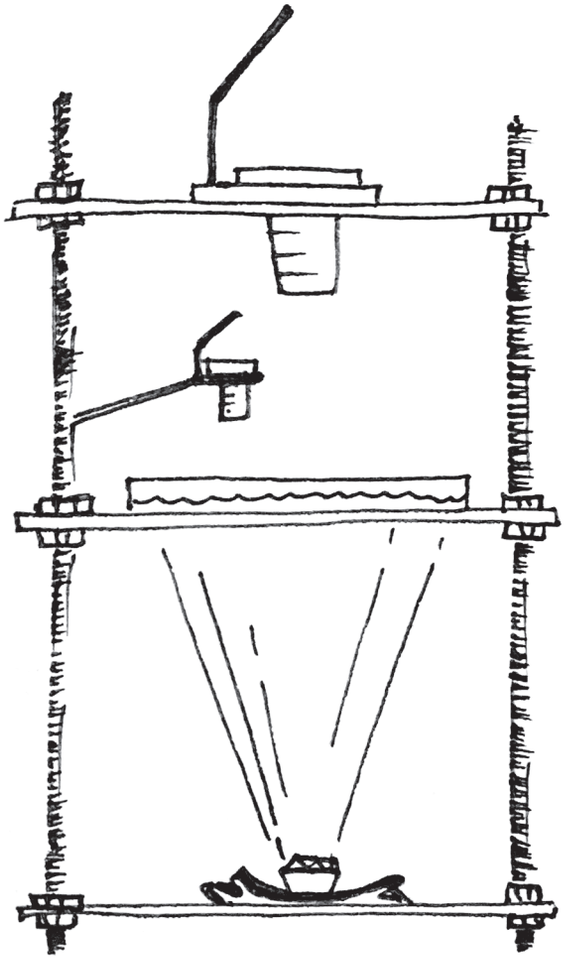



# *WANDERING RESIDENCIES*
## *Winter / Spring 2024*

**Once our mobile, autonomous devices had been imagined, discussed, designed, fabricated and tested, we were able to launch open calls for two one month-long residencies in June and September 2024.**

**Given the inherent mobility of these tools, the residencies were designed around different landscape types, inviting the artists to infuse their performances with the identity of the spaces in which they were working, and to develop their site-specific dimension.**

**The first residency took place in the Breil district of Nantes, a working-class neighbourhood on the outskirts of the city characterised by its modernist buildings. The second residency was held in Saint-Nazaire, a small coastal city an hour's drive west of Nantes, whose architecture is marked by its shipbuilding industry and the reconstruction of almost the entire city following the Second World War bombings.**

**The project by Ana Edwards (based in Belgium) and Francisco Rodríguez Teare (based in France) was selected for the first residency: a family-friendly, joyful and analogue mobile cinematic procession, inspired by the religious processions of their native Chile. An obvious combination of content, form and context.**

**For the second residency, we chose the project by Petra Graf (Austria) and James Edmonds (England), a duo of film and visual artists based in Berlin. Between the seafront and submarine base, their project consisted of a poetic walk punctuated by micro-projections of the films they shot during the residency. Conceived as visual haikus and nestled in unexpected corners of the harbour city, this moving reverie ended with a performance combining an immersive, kinetic and sound installation with multi-focal projection games.**

# *ANA EDWARDS & FRANCISCO RODRÍGUEZ TEARE*

On Thursday of the first week of the residency, we had 25 days ahead of us. The form commanded the process: a trichromatic film (colour separated by RGB) and, instead of a procession that glorified a carnival-dressed virgin carried by parishioners, we had a black-and-white film projected with the help of a wireless 16mm projector powered by a lithium battery. The parishioners moving the platform were there, but as participants in a community bingo, celebrating the arrival of summer in the Breil-Nantes neighbourhood.

On Thursday of the first week, the idea for the film still wasn't there. What if we took a symbolic journey from Nantes to the sea, following a river—a passage from civilisation to nature? A bit cliché, perhaps, and also logistically complex. Then we thought about symbology: blue is rational, red is emotional, and green... we never quite managed to find a symbol for green. The film was called *You, the Sun*, and it told the story of an old man who became the sun through the process of desiring himself, an ebb and flow of emotions turned outward and inward. That didn't work either; it felt a bit too conceptual. One night, frustrated, we went back home and smoked. In a moment of laughter mixed with disillusionment, we reminisced about the early educational films Abbas Kiarostami made for the Iranian Ministry of Education, teaching children how to brush their teeth and how to learn the alphabet. There was one where children watched cartoons of animals and mimicked their movements: a kangaroo, a tiger, an ostrich. That was it. An educational film about trichromy, with children and animals. The idea clicked, and a few days later we met the children, Shannon and Ethan, and the animals who would become the protagonists, along with Rémi, a retired man from the Breil neighbourhood who, in his youth, had performed in a play called *Éloge de la Folie*, in which children portrayed animals in a farm driven mad by a full moon. Our aim was to create a free adaptation of that distant experience Rémi had shared with us.

**Ana Edwards & Francisco Rodríguez Teare**



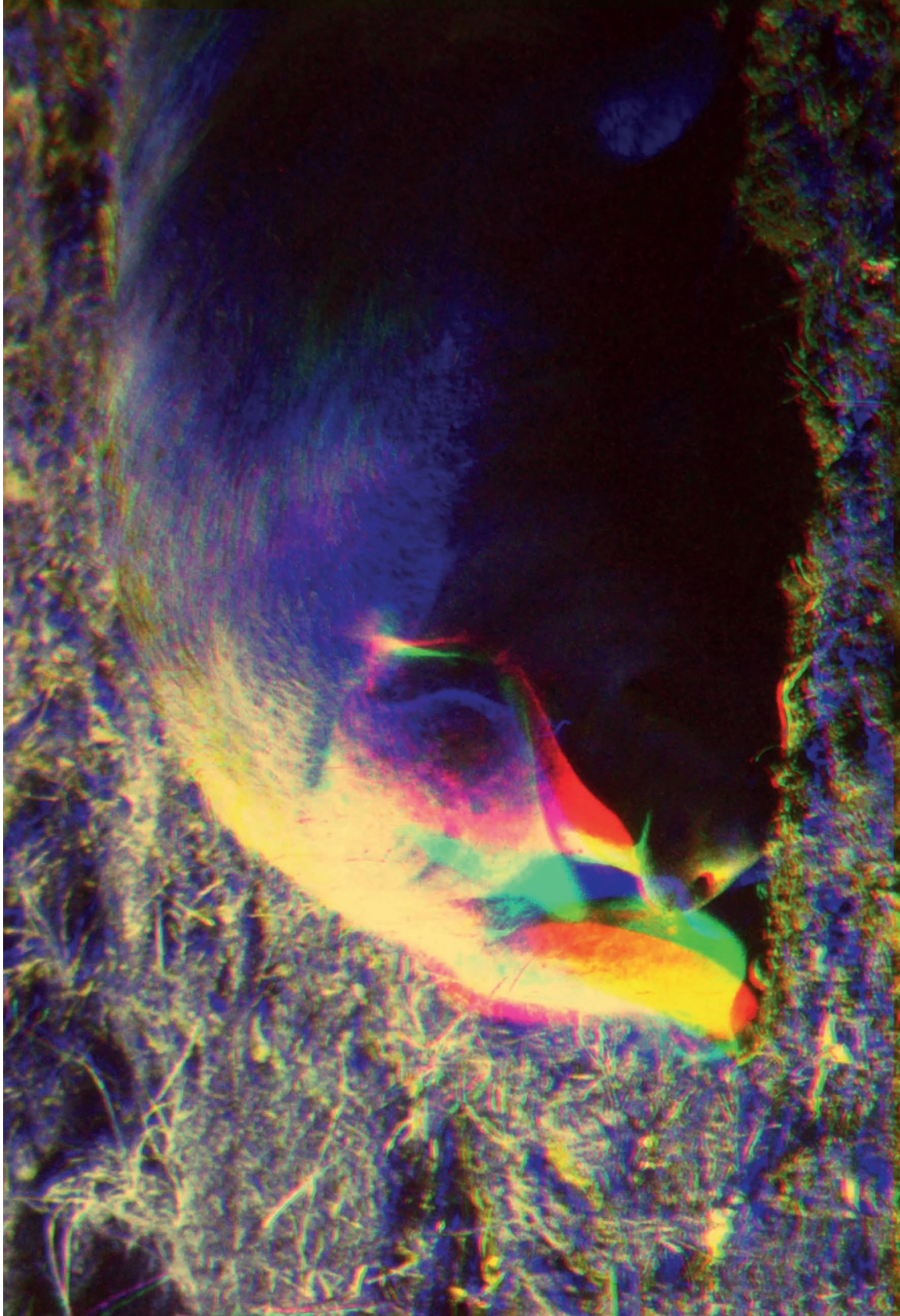

# *PETRA GRAF & JAMES EDMONDS*



Romaric makes a stand at P9

Here in this charming corner of Saint Naz we could get food, equipment and even wash our clothes!



Hard at work in our little studio at Le Projet Neuf. A beautiful garden, maintained by our friend Stan, surrounds the building. Here we also had our very own black & white film lab.

First impressions upon arrival included the wonderful market building. When Antoine brought us there and showed us the insider vegetable tips we knew we were in good hands. He also introduced us to our favourite café, la Bretonne.





The "UFO" gymnasium only furthered our fantasies of Saint Naz as a brutalist dreamworld.

official residency transportation





Our local expert Antoine from MIRE, guide and friend, took us on little tours of the city and a walk across the beaches further out along the estuary.

Our home backed onto the Botanical Garden of the city, so we had the best back yard we could have imagined, with breakfasts and lunches on the grass!



Chloé and Léon hanging out at our pad





morning runs along the seafront!



costal light is always good

In the MIRE lab at Nantes, Carole introduced us for the first time to E6 hand-processing. We developed our own Ektachrome rolls as we shot them in Saint Nazaire. Night shifts in the lab and Sunday morning bakery products from the market. Aurélie, Chloé, Erwin and Joachim always on hand to help or hang out!

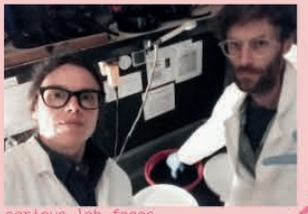

serious lab faces



**Final presentation for our Wandering Residency**
*En Route and In Between*, 2024
Cinematic walking tour, performance, installation
/ 16mm film





after work drinks with Antoine

Le Tour:

1. under the concrete building
2. the foot
3. the ext. wall of La Guingette
4. car park behind Cinéville building with tree shadows
5. geometric wall of residential car park
6. submarine base, final installation/lantern performance



by Petra Graf & James Edmonds

# *JULY 2025*
# *MONTSOREAU AND TURQUANT. CASTLE, BANKS OF THE LOIRE, TROGLODYTES.*

**As the concluding chapter of a four-year collective adventure, we organized the third residency following a different format and invited the team of artists-tinkerers to explore the creative potential of the devices they had designed together during the seminars. At the end of the residency, we made the following request to them:**

DESCRIBE OR RECOUNT A MOMENT OR A FEELING YOU WILL REMEMBER FROM THE WANDERING EXPERIENCE (IN 60 WORDS)

15 outlooks unfold over the following pages.

”The poetic and political action of Making together, of the Common. Everything is tested, shared, researched and nurtured: a virtuous loop of an art that steps outside the frame and rereads itself, both in terms of sound and image, through the film strip /magnetic tape.”

**Lucie Bortot-Schneider**

“Good people, good food and radiant ideas converged in beautiful Nantes, creating mesmerising visual and sonic wonders that linger in the imagination and spark new visions.”

**Guillermo Tellechea**

“Wandering could be a compound word: luminosensibilitéinternationale, génialecuriosityonscreen, rebondirencoreetagain, tisserbetweentoustes, tryandfailandessayerencoreetexperimenterbetter, makemakemakemake, rirebeaucoup, rencontresss, singularitésartistiques, inventions, partagerlessavoirs, cuisineretdéguster, letsgopartyandhavefuninexperimentalwork... ”

**Marjorie Le Berre**

“From my time at Wandering, I remember the care and attention that went into preparing meals, thanks to the cooks both inside and outside the team. This created rich moments of conviviality during mealtimes—some of the best moments for exchanging ideas between the different subgroups—and allowed us to concentrate fully on our work. #materialconditionsofideaproduction =p”

**Maxime Führer**

“With the stars as my umbrella
Night as a blanket
A whisper of a breeze
With trees as witnesses
And hands as branches
In the company of a passionate few
We found new ways of seeing.
I gazed
I peered
... I fell in love
... All over again”

**Karan Talwar**

“We had planned an extensive outdoor performance at the Obskura festival in Rennes, but it started raining suddenly. We scrapped our programme and started planning an indoor ‘wandering’ with only one hour before showtime. At that moment, I could feel the strength of the group, forged through the challenges we faced and the sharing among us over several years. Anxiety turned into opportunity, everybody did more than was asked of them, and the show went perfectly (until the cops came).”

**Zach Poff**

“In a remote place where fiction and reality meet, a group of like-minded yet very different people gather to create together.
In the end, no matter what you expect, plan or wish, it will always be different to what you have imagined.
It will be better, and it will surprise you and accompany you for quite some time.
That’s beautiful.”

**Stefan Voglsinger**

“I was the screen as we moved through a cave where one person projected with a camera and another had a necklace of bottles. There were cocktails of sun, electricity, a plant, and a power plant. The audience sipped these elements and tried to guess whether they were looking at a projected castle, a plant, or a nuclear power plant, all of which from along the Loire”

**Katherine Bauer**

“The big demo on the last night of the last seminar. By the time we’d finally managed to put away the last of the cables and screwed on the Octoploc box, we were running late and the office was already plunged into dim light with flashes of images from the dervish projectors and the magic lantern. It was a crazy battle for the very first installation of the Octoploc. There was a lot of buzz and stress, but finally all the synths were plugged in and a great jam ensued.”

**Pierre Pierre Pierre**

“I remember the moment when I felt free enough to cut an Eiki in two with a sword and my friends rolling their eyes... By the way, Eishaki is shorter now. Conducting a collective research to build new toys boosts team confidence.”

**Loïc Verdillon**

“The mix of creative work and domestic life in the garden of the house where I stayed during the last Wandering residency: the sound team setting up on the grass while someone wakes up and gets out of a tent, long talks over breakfast, a barbecue, outdoor projections, clothes and film drying on a rope, the 7 am church bell creating a beautiful collective trauma...”

**Sofia Arriscado**

“I think I’ll remember that grand finale at the château. It was the moment when the whole Wandering SPECTRAL experience came together in a technical, human and artistic collaboration: I projected images, set up speakers, carried a dragon and photographed it. For me, these displacements are an essential form of ‘wandering’ to rethink art today.”

**Estelle Chaigne**

“The magical transition from intensely focusing on a task—filming, processing, arranging plant life on a strip of celluloid—to the call for lunch, snapping out of our focus to share a meal and talk about our various projects and how they crossover and coalesce...Looking at all these people, inspired and hungry for lunch and more!”

**Alex MacKenzie**

“La Prée. On Antoine’s Island. The pleasant sensation of detaching oneself from the power network. Getting out of the workshop. Enjoying the flexibility and lightness of cable-free equipment as a group. Just images and sound in the midst of grass, hay and wind. Alex’s images making the evening sky flicker.”

**Marc Simonart**

“Artistic mobility is so cool. It makes you feel like explorers, able to tackle a mountain from the side, planting a 16mm film roped together with hi-fi cable. All these devices offer a new perspective of beautiful, enhanced walks.”

**Antoine Capet**



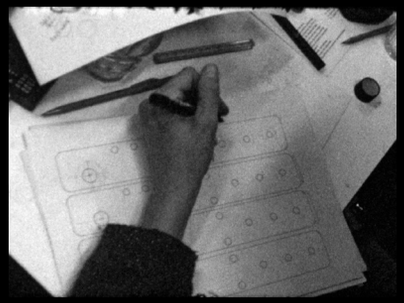

Mire is an association dedicated to experimental cinema and moving images founded in 1993 and based in Nantes, France.

Mire holds projections and multidisciplinary events, and runs a shared film laboratory, as well as workshops and educational activities.

www.mire-exp.org

Pictures / drawings / sketches:
Chloé Beulin, Estelle Chaigne, James Edmonds, Ana Edwards, Élodie Ferré, Petra Graf, Marjorie Le Berre, Alex MacKenzie, Mariane Moula, Aurélie Percevault, Zach Poff, Francisco Rodríguez Teare, Pierre Signolat, Loïc Verdillon

Intro texts:
Aurélie Percevault and Chloé Beulin

The quotes on pages 118–119 are excerpts from the applications received for the Wandering seminars

Mire – SPECTRAL team:
Chloé Beulin, Élodie Ferré, Louise Gurman Dessauce, Alexia Hénon, Antoine Ledroit, Mariane Moula, Aurélie Percevault, Pierre Signolat, Carole Thibaud, Erwan Tracol

Delicious food:
Maxime Canelli and Flora Nunzi

And thanks for their help to:
Aurore Besson, Antoine Birot, Blockhaus DY10 team, Château de Montsoreau team, P9 team, Studio d'en Haut



Co-funded by
the European Union

Baltic Analog Lab:
Ministry of Culture
Republic of Latvia
VALSTS
KULTURKAPITĀLA FONDS
RĪGA

Crater-Lab:
Generalitat
de Catalunya
Barcelona

WORM Filmwerkplaats:
Ministry of Education, Culture and
Science
Gemeente
Rotterdam

Laia – Torre:
REPÚBLICA
PORTUGUESA
CULTURA
dg'ARTES
DIREÇÃO-GERAL
DAS ARTES
ICA
INSTITUTO DO CINEMA
E DO AUDIOVISUAL
BATALHA CENTRO DE CINEMA
Porto.

LaborBerlin:
Senatsverwaltung
für Kultur und Europa
BERLIN

Mire:
PRÉFET
DE LA RÉGION
PAYS DE LA LOIRE
Liberté
Égalité
Fraternité
Région
PAYS DE LA LOIRE
Loire
Atlantique
INSTITUT
FRANÇAIS
Nantes

**Graphic design**
**Pedro Nora**

**Spectral photos**
**(cover / pp. 1–6, 141–143)**
**Dinis Santos**

**Proofreading**
**Nuno Ventura Barbosa**

**Printing**
**Orgal, Porto, Portugal**

**Legal deposit**
**557439/25**

**December 2025**

SP TR L
SPECTRAL
EC A

